Z-FLEX®
CHIMNEY & VENTING SOLUTIONS

Z-VENT® Dimensional Data

Z-VENT®
UL1738 & ULC-S636 Listed 29-4C SS Gas Vent

Z-Vent® Single Wall

Concentric Increaser 1
Eccentric Increaser 2
Concentric Reducer 2
Eccentric Reducer 3
Lateral Wye 3
Lateral Wye Reducing Branch 4
Tee 4
Tee Reducing Branch 5
Boot Tee 5
Boot Tee Reducing Branch 6
Tee Cap 6
Tee Cap with Drain 7
End Cap Drain 7
Horizontal Drain Pipe 8
Vertical Drain Tee with Cap 8
Vertical / Horizontal Drain Pipe 9
Back-flow Preventer 9
Pipe 10
Adjustable Pipe 11
Pipe with Inspection Port 11
15° Elbow 12
30° Elbow 12
45° Elbow 13
90° Elbow 13
Low Resistance Rain Cap 14
Rain Cap with Wind Band 14
Extreme Weather Rain Cap 15
Temination No Loss Stack 15
Exit Cone 15
Termination Tee 16
Wall Termination Box 16
Termination Hood 17
Termination Hood with Damper 17
45° Termination Elbow 17
90° Termination Elbow 18
Termination Coupling 18
45° Angle Termination 18

Z-Vent® Single Wall & Double Wall

Roof Jack Support System 19
Flashing Flat 20
Flashing Adjustable 21
Storm Collar (Top Support) 22
Guy Band 23
Wall Thimble - Z-Vent Single & Double Wall Snap 24-25
Firestop 26
Firestop Support 27
Wall (Vent) Support 28
Floor Base Support 29
Base (Wall) Support 30
Clamp Band Support 31
Vertical Rise Support 32
Condensate Tube Kit 33
Lube 33

Z-Vent® Transition Adapters

SW to DW Snap Adapter 34
DW Snap to SW Adapter 34
SW to ZV Clamp DW Adapter 35
ZV Clamp DW to SW Adapter 35

*AL 29-4C is a registered trademark of ATI Properties, Inc..

The information proved within is for informational purposes only. We have made every effort to ensure the accuracy of the proved information and assume no responsibility for any loss or damage due to errors or omissions or to the use or misuse of any information supplied. It is impossible to test all products under all conditions to which they might be subjected in the field. It is therefore the buyer and/or end users' responsibility to test all products under the conditions that duplicate the service conditions prior to installation. All improvements, all specifications are subject to change without prior notice. It is the buyer and/or end users' responsibility to review our complete **Terms and Conditions of Sale** located on our web sites at: **www.novaflex.com** | **www.z-flex.com** | **www.flexmaster.com**.

Z-Vent® Double Wall with Snap-Lock

Concentric Increaser 36
Eccentric Increaser 37
Concentric Reducer 38
Eccentric Reducer 38
Lateral Wye 39
Lateral Wye Reducing Branch 39
Tee 40
Tee Reducing Branch 40
Boot Tee 41
Boot Tee Reducing Branch 42
Tee Cap 43
Tee Cap with Drain 43
End Cap Drain 44
Vertical / Horizontal Drain Pipe 44
Fixed Blade Damper 45
Pipe 46
Adjustable Pipe 47
Pipe with Inspection Port 47
15° Elbow 48
30° Elbow 48
45° Elbow 49
90° Elbow 49
Low Resistance Rain Cap 50
Rain Cap with Wind Band 50
Wall Termination Box 51
Exit Cone 51
Termination Screen 52
45° Angle Termination 52
Termination Tee 53
Termination No Loss Stack 53

Z-Vent DW Transition Adapters

DW Snap to DW ZV-Clamp Adapters 54-55
DW ZVClamp to DW Snap Adapters 55

Z-Vent® Double Wall with ZV Clamp

Concentric Increaser 56
Eccentric Increaser 57
Lateral Wye 58
Lateral Wye Reducing Branch 59-60
Tee 61
Boot Tee 61
Boot Tee Reducing Branch 62-63
Tee Cap 64
Tee Cap Drain 64
End Cap Drain 65
Vertical / Horizontal Drain Pipe 65
Fixed Blade Damper 66
Pipe 67
Adjustable Pipe 68
Pipe with Inspection Port 68
15° Elbow 69
30° Elbow 69
45° Elbow 70
90° Elbow 70
Low Resistance Rain Cap 71
Rain Cap with Wind Band 71
Wall Termination Box 72
Termination No Loss Stack 72
73Exit Cone73 72
74Termination Screen 73
45° Angle Termination 73
4" - 7" Wall Thimble Pipe 74
7" - 13" Wall Thimble Pipe 74

Additional parts available on request.

Z-VENT®

UL1738 & ULC-S636 Listed 29-4C SS Gas Vent

Z-Vent® Double Wall with ZV Clamp-Continued

ZV Clamp 75
ZV Clamp Replacement Harware 75
ZV Clamp Gasket 75

Notes:

Single Wall 75
Double Wall with ZV Clamp 75
Smoothcore 75
No Loss Stacks 75

Z-Vent Flexible Smoothcore

Rain Cap / Flashing 76
Extension - Rain Cap 76
Female Connector 76
Smoothcore Flex 77
Male Connector 78
Sealant 78

Z-Vent Concentric

Pipe 79-80
Pipe Adjustable 81
Pipe Drain 81
Elbow 45° 82
Elbow 90° 82
Intake 83
Intake Horizontal 83
Trim Ring 84

Notes:

Concentric with Double Wall Screw Joint 84
Double Wall with ZV Clamp & Fiber Insulation 84

Z-Vent Collinear to Concentric

Adapter 85
Tee 86
Lateral 86

Z-Vent® Warranty 87

Concentric Increaser

A	B	C	Part Number	Description
3	4	7.00	2SVSI0304	Z-Vent Increaser 3 to 4 in
3	5	8.15	2SVSI0305	Z-Vent Increaser 3 to 5 in
3	6	-	2SVSI0306	Z-Vent Increaser 3 to 6 in
4	5	7.00	2SVSI0405	Z-Vent Increaser 4 to 5 in
4	6	8.15	2SVSI0406	Z-Vent Increaser 4 to 6 in
4	8	10.30	2SVSI0408	Z-Vent Increaser 4 to 8 in
5	6	7.00	2SVSI0506	Z-Vent Increaser 5 to 6 in
5	7	8.15	2SVSI0507	Z-Vent Increaser 5 to 7 in
5	8	9.20	2SVSI0508	Z-Vent Increaser 5 to 8 in
5	9	10.30	2SVSI0509	Z-Vent Increaser 5 to 9 in
5	14	-	2SVSI0514	Z-Vent Increaser 5 to 14 in
6	7	7.00	2SVSI0607	Z-Vent Increaser 6 to 7 in
6	8	8.15	2SVSI0608	Z-Vent Increaser 6 to 8 in
6	9	9.20	2SVSI0609	Z-Vent Increaser 6 to 9 in
6	10	10.30	2SVSI0610	Z-Vent Increaser 6 to 10 in
6	12	13.25	2SVSI0612	Z-Vent Increaser 6 to 12 in
6	14	-	2SVSI0614	Z-Vent Increaser 6 to 14 in
7	8	7.00	2SVSI0708	Z-Vent Increaser 7 to 8 in
7	9	8.15	2SVSI0709	Z-Vent Increaser 7 to 9 in
7	10	9.20	2SVSI0710	Z-Vent Increaser 7 to 10 in
7	12	11.36	2SVSI0712	Z-Vent Increaser 7 to 12 in
8	9	9.75	2SVSI0809	Z-Vent Increaser 8 to 9 in
8	10	8.15	2SVSI0810	Z-Vent Increaser 8 to 10 in
8	12	10.30	2SVSI0812	Z-Vent Increaser 8 to 12 in
9	10	7.00	2SVSI0910	Z-Vent Increaser 9 to 10 in
9	12	9.20	2SVSI0912	Z-Vent Increaser 9 to 12 in
10	12	8.15	2SVSI1012	Z-Vent Increaser 10 to 12 in
10	14	11.30	2SVSI1014	Z-Vent Increaser 10 to 14 in
10	16	13.43	2SVSI1016	Z-Vent Increaser 10 to 16 in
12	14	9.15	2SVSI1214	Z-Vent Increaser 12 to 14 in
12	16	11.30	2SVSI1216	Z-Vent Increaser 12 to 16in
12	18	13.43	2SVSI1218	Z-Vent Increaser 12 to 18 in
12	20	13.09	2SVSI1220	Z-Vent Increaser 12 to 20 in
12	22	9.00	2SVSI1222	Z-Vent Increaser 12 to 22 in
14	18	11.30	2SVSI1418	Z-Vent Increaser 14 to 18 in
14	20	13.43	2SVSI1420	Z-Vent Increaser 14 to 20 in
16	18	9.15	2SVSI1618	Z-Vent Increaser 16 to 18 in
16	20	11.30	2SVSI1620	Z-Vent Increaser 16 to 20 in
18	20	9.15	2SVSI1820	Z-Vent Increaser 18 to 20 in
18	22	11.30	2SVSI1822	Z-Vent Increaser 18 to 22 in
18	24	13.43	2SVSI1824	Z-Vent Increaser 18 to 24 in
20	22	9.15	2SVSI2022	Z-Vent Increaser 20 to 22 in
20	24	11.30	2SVSI2024	Z-Vent Increaser 20 to 24 in
22	24	9.15	2SVSI2224	Z-Vent Increaser 22 to 24 in

Used to upsize a vent system.
Recommended *ONLY* for use with vertical vent runs to ensure proper condensate drainage.

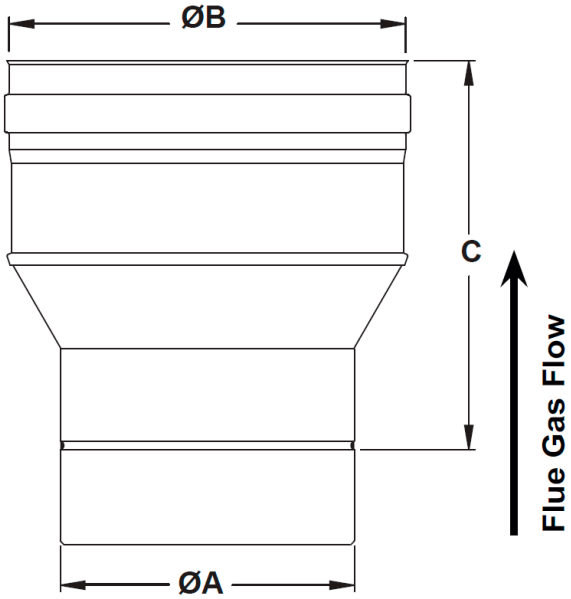

Z-VENT® Single Wall

Eccentric Increaser

A	B	C	D	Part Number	Description
3	4	9.25	0.50	2SVSIE0304	Z-Vent Eccentric Increaser 3 to 4 in
3	5		1.00	2SVSIE0305	Z-Vent Eccentric Increaser 3 to 5 in
3	6	10.25	1.50	2SVSIE0306	Z-Vent Eccentric Increaser 3 to 6 in
4	5	10.75	0.50	2SVSIE0405	Z-Vent Eccentric Increaser 4 to 5 in
4	6	11.75	1.00	2SVSIE0406	Z-Vent Eccentric Increaser 4 to 6 in
4	8	12.75	2.00	2SVSIE0408	Z-Vent Eccentric Increaser 4 to 8 in
5	6	12.00	0.50	2SVSIE0506	Z-Vent Eccentric Increaser 5 to 6 in
5	7	12.00	1.00	2SVSIE0507	Z-Vent Eccentric Increaser 5 to 7 in
5	8	14.00	1.50	2SVSIE0508	Z-Vent Eccentric Increaser 5 to 8 in
5	9		2.00	2SVSIE0509	Z-Vent Eccentric Increaser 5 to 9 in
6	7	12.00	0.50	2SVSIE0607	Z-Vent Eccentric Increaser 6 to 7 in
6	8	12.00	1.00	2SVSIE0608	Z-Vent Eccentric Increaser 6 to 8 in
6	9	14.00	1.50	2SVSIE0609	Z-Vent Eccentric Increaser 6 to 9 in
6	10	14.00	2.00	2SVSIE0610	Z-Vent Eccentric Increaser 6 to 10 in
6	12	14.00	3.00	2SVSIE0612	Z-Vent Eccentric Increaser 6 to 12 in
7	8	12.00	0.50	2SVSIE0708	Z-Vent Eccentric Increaser 7 to 8 in
7	9	-	1.00	2SVSIE0709	Z-Vent Eccentric Increaser 7 to 9 in
7	10	12.00	1.50	2SVSIE0710	Z-Vent Eccentric Increaser 7 to 10 in
7	12	14.00	2.50	2SVSIE0712	Z-Vent Eccentric Increaser 7 to 12 in
8	9	11.75	0.50	2SVSIE0809	Z-Vent Eccentric Increaser 8 to 9 in
8	10	12.00	1.00	2SVSIE0810	Z-Vent Eccentric Increaser 8 to 10 in
8	12	12.00	2.00	2SVSIE0812	Z-Vent Eccentric Increaser 8 to 12 in
8	14	14.00	3.00	2SVSIE0814	Z-Vent Eccentric Increaser 8 to 14 in
9	10	12.00	0.50	2SVSIE0910	Z-Vent Eccentric Increaser 9 to 10 in
10	12	12.00	1.00	2SVSIE1012	Z-Vent Eccentric Increaser 10 to 12 in
10	14	13.00	2.00	2SVSIE1014	Z-Vent Eccentric Increaser 10 to 14 in

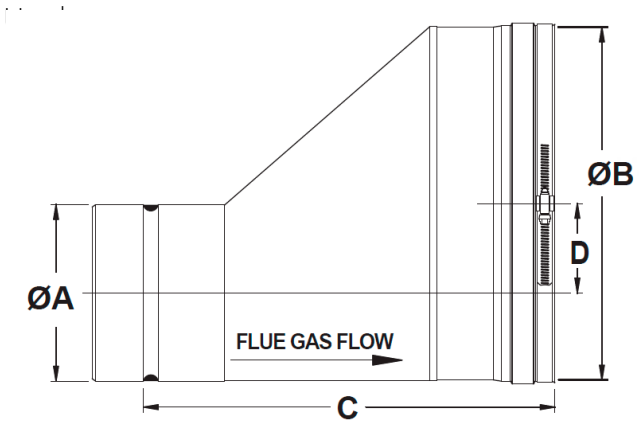

A	B	C	D	Part Number	Description
10	16	14.00	3.00	2SVSIE1016	Z-Vent Eccentric Increaser 10 to 16 in
12	14	15.00	1.00	2SVSIE1214	Z-Vent Eccentric Increaser 12 to 14 in
12	16	15.00	2.00	2SVSIE1216	Z-Vent Eccentric Increaser 12 to 16 in
12	18	15.00	3.00	2SVSIE1218	Z-Vent Eccentric Increaser 12 to 18 in
14	16	15.00	1.00	2SVSIE1416	Z-Vent Eccentric Increaser 14 to 16 in
14	18	15.00	2.00	2SVSIE1418	Z-Vent Eccentric Increaser 14 to 18 in
16	18	15.00	1.00	2SVSIE1618	Z-Vent Eccentric Increaser 16 to 18 in
16	20	15.00	2.00	2SVSIE1620	Z-Vent Eccentric Increaser 16 to 20 in
16	22	15.00	3.00	2SVSIE1622	Z-Vent Eccentric Increaser 16 to 22 in
18	20	15.00	1.00	2SVSIE1820	Z-Vent Eccentric Increaser 18 to 20 in
20	22	15.00	1.00	2SVSIE2022	Z-Vent Eccentric Increaser 20 to 22 in
20	24	15.00	2.00	2SVSIE2024	Z-Vent Eccentric Increaser 20 to 24 in
22	24	15.00	1.00	2SVSIE2224	Z-Vent Eccentric Increaser 22 to 24 in

Used to downsize a vent system.

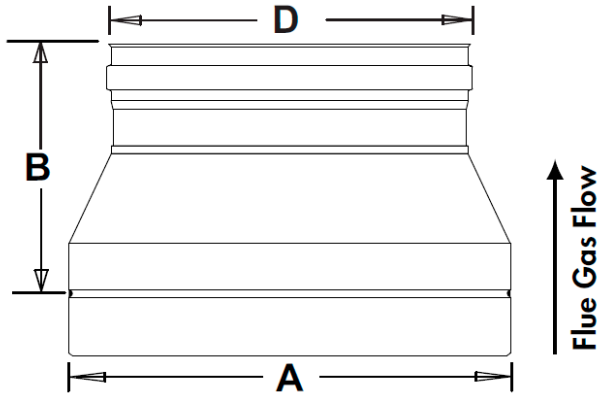

Concentric Reducer

A	B	D	Part Number	Description
12	8	10,08,07	2SVSR(A)(D)	Z-Vent Reducer(A)to(D)
10	8	8,7,6	2SVSR(A)0(D)	Z-Vent Reducer(A)to(D)
8	8	7,6,5	2SVSR0(A)0(D)	Z-Vent Reducer(A)to(D)
7	8	6,5,4	2SVSR0(A)0(D)	Z-Vent Reducer(A)to(D)
6	8	5,4,3	2SVSR0(A)0(D)	Z-Vent Reducer(A)to(D)
5	8	4,3	2SVSR0(A)0(D)	Z-Vent Reducer(A)to(D)
4	8	3	2SVSR0(A)0(D)	Z-Vent Reducer(A)to(D)

Eccentric Reducer

A	B	C	D	Part Number	Description
4	3	8.5	0.5	2SVSRE0403	Z-Vent Eccentric Reducer 4in to 3in
6	4	10	1	2SVSRE0604	Z-Vent Eccentric Reducer 6in to 4in
6	5	10	0.5	2SVSRE0605	Z-Vent Eccentric Reducer 6in to 5in
8	6	10	1	2SVSRE0806	Z-Vent Eccentric Reducer 8in to 6in
8	7	10	0.5	2SVSRE0807	Z-Vent Eccentric Reducer 8in to 7in
9	8	10	0.5	2SVSRE0908	Z-Vent Eccentric Reducer 9in to 8in
10	8	11.75	1	2SVSRE1008	Z-Vent Eccentric Reducer 10in to 8in
10	9	9	0.5	2SVSRE1009	Z-Vent Eccentric Reducer 10in to 9in
12	8	13	2	2SVSRE1208	Z-Vent Eccentric Reducer 12in to 8in
12	10	8.75	1	2SVSRE1210	Z-Vent Eccentric Reducer 12in to 10in
14	9	13	2.5	2SVSRE1409	Z-Vent Eccentric Reducer 14in to 9in
18	16	14.75	1	2SVSRE1816	Z-Vent Eccentric Reducer 18in to 16in

Used to downsize a vent system.

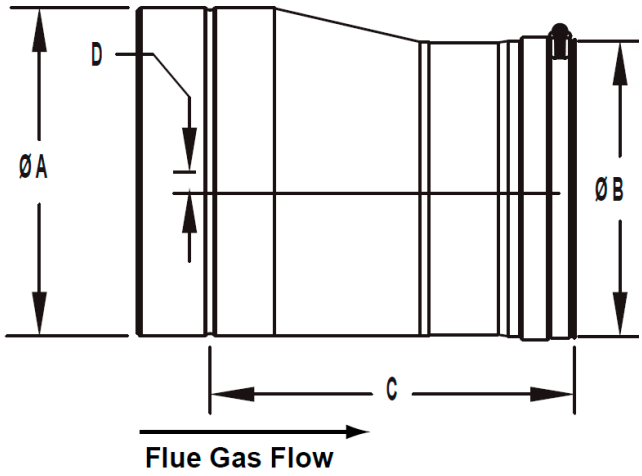

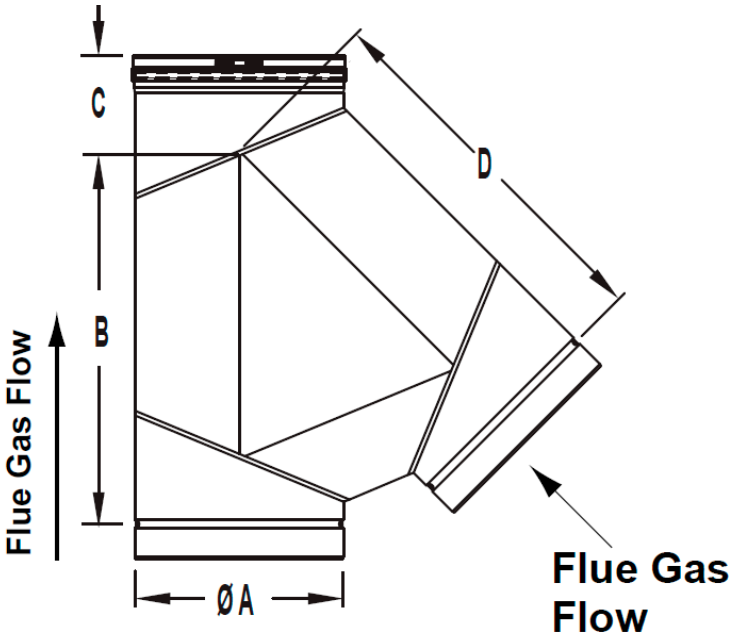

Lateral Wye

A	B	C	D	Part Number	Description
5	9.25	4.25	9.5	2SVSL0545	Z-Vent Lateral 45° 5 in
6	11.5	4.25	11.25	2SVSL0645	Z-Vent Lateral 45° 6 in
7	13	4.5	13	2SVSL0745	Z-Vent Lateral 45° 7 in
8	14.75	4.5	14.75	2SVSL0845	Z-Vent Lateral 45° 8 in
10	18.15	5	18	2SVSL1045	Z-Vent Lateral 45° 10 in
12	21.5	5.5	21.5	2SVSL1245	Z-Vent Lateral 45° 12 in
14	28	6.75	24.85	2SVSL1445	Z-Vent Lateral 45° 14 in
16	28.75	8	28.75	2SVSL1645	Z-Vent Lateral 45° 16 in

Z-VENT® Single Wall

Lateral Wye Reducing Branch

A	B	C	D	E	Part Number	Description
3	2.4				2SVSL0302.445	Z-Vent Lateral 45 Deg 3in w/2.4in Branch
4	2.4				2SVSL0402.445	Z-Vent Lateral 45 Deg 4in w/2.4in Branch
6	2.4				2SVSL0602.445	Z-Vent Lateral 45 Deg 6in w/2.4in Branch
8	2.4				2SVSL0802.445	Z-Vent Lateral 45 Deg 8in w/2.4in Branch
4	3				2SVSL040345	Z-Vent Lateral 45 Deg 4in w/3in Branch
6	3				2SVSL060345	Z-Vent Lateral 45 Deg 6in w/3in Branch
8	3				2SVSL080345	Z-Vent Lateral 45 Deg 8in w/3in Branch
6	4				2SVSL060445	Z-Vent Lateral 45 Deg 6in w/4in Branch
8	4				2SVSL080445	Z-Vent Lateral 45 Deg 8in w/4in Branchh
10	4				2SVSL100445	Z-Vent Lateral 45 Deg 10in w/4in Branch
12	4				2SVSL120445	Z-Vent Lateral 45 Deg 12in w/4in Branch
10	6	10.5	5	12	2SVSL100645	Z-Vent Lateral 45 Deg 10 in w/6in Branch
12	6	11.75	5.75	14	2SVSL120645	Z-Vent Lateral 45 Deg 12in w/6in Branch
12	8	14.25	5.75	16.25	2SVSL120845	Z-Vent Lateral 45 Deg 12in w/8in Branch
14	8	13.75	6.75	16	2SVSL140845	Z-Vent Lateral 45 Deg 14in w/8in Branch
16	8	16.50	7.5	19.65	2SVSL160845	Z-Vent Lateral 45 Deg 16in w/8in Branch
16	9	15.45	7.55	18.35	2SVSL160945	Z-Vent Lateral 45 Deg 16in w/9in Branch
16	10	17.45	7.55	19.75	2SVSL161045	Z-Vent Lateral 45 Deg 16in w/10in Branch
18	8	16.00	8	20.10	2SVSL180845	Z-Vent Lateral 45 Deg 18in w/8in Branch
18	10	17.00	8	20.25	2SVSL181045	Z-Vent Lateral 45 Deg 18in w/10in Branch
18	14	23.25	8.5	24.9	2SVSL181445	Z-Vent Lateral 45 Deg 18in w/14in Branch
20	16	27.85	8.4	29.50	2SVSL201645	Z-Vent Lateral 45 Deg 20in w/16in Branch

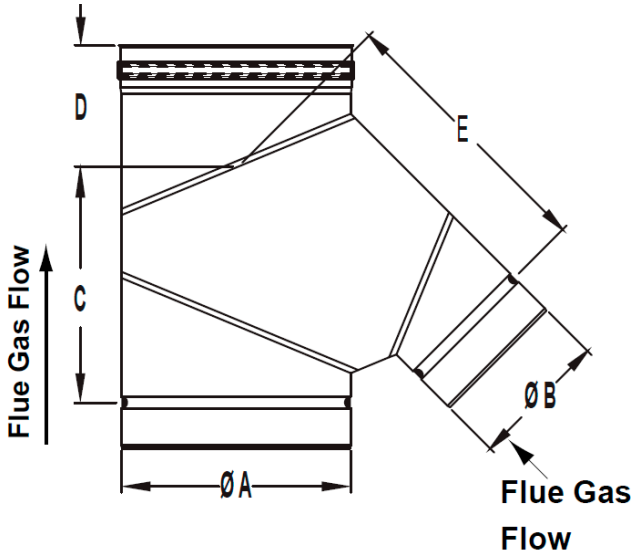

A tee is used to connect horizontal and vertical vent sections.
Tee cap sold separately.

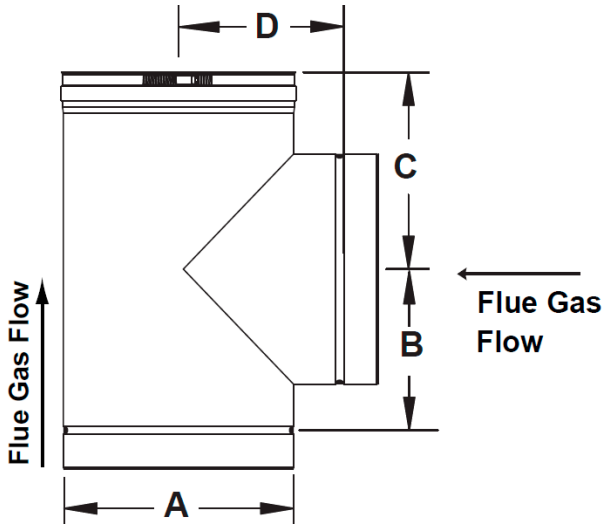

Tee

A	B	C	D	Part Number	Description
3	3.54	5.75	4.00	2SVST03	Z-Vent Tee 3 in
4	3.08	6.17	3.63	2SVST04	Z-Vent Tee 4 in
5	3.58	6.67	4.50	2SVST05	Z-Vent Tee 5 in
6	5.43	7.17	5.00	2SVST06	Z-Vent Tee 6 in
7	5.96	7.67	5.50	2SVST07	Z-Vent Tee 7 in
8	5.55	8.20	6.50	2SVST08	Z-Vent Tee 8 in
9	6.48	8.00	6.50	2SVST09	Z-Vent Tee 9 in
10	6.75	8.25	7.00	2SVST10	Z-Vent Tee 10 in
12	8.25	9.75	8.00	2SVST12	Z-Vent Tee 12 in
14	8.25	10.75	8.00	2SVST14	Z-Vent Tee 14 in
16	9.25	11.75	9.50	2SVST16	Z-Vent Tee 16 in
18	9.75	12.25	10.00	2SVST18	Z-Vent Tee 18 in
20	10.75	13.25	11.00	2SVST20	Z-Vent Tee 20 in
22	12.88	14.75	13.00	2SVST22	Z-Vent Tee 22 in
24	13.25	15.75	15.00	2SVST24	Z-Vent Tee 24 in

Tee Reducing Branch

A	B	C	D	E	Part Number	Description
10	6	6.85	8.625	7.50	2SVST1006	Z-Vent Tee 10 X 6 Branch
12	6	5.0	7.0	7.8	2SVST1206	Z-Vent Tee 12 X 6 Branch
14	6	5.25	8.0	9.5	2SVST1406	Z-Vent Tee 14 X 6 Branch
14	8	7.75	10.0	9.5	2SVST1408	Z-Vent Tee 14 X 8 Branch
14	10	7.25	10.0	9.5	2SVST1410	Z-Vent Tee 14 X 10 Branch
14	12	7.84	10.875	9.75	2SVST1412	Z-Vent Tee 14 X 12 Branch
18	12	7.9	10.25	11.4	2SVST1812	Z-Vent Tee 18 X 12 Branch
20	12	7.8	9.85	12.0	2SVST2012	Z-Vent Tee 20 X 12 Branch
22	14	8.75	11.5	13.0	2SVST2214	Z-Vent Tee 22 X 14 Branch
22	18	10.75	13.5	13.0	2SVST2218	Z-Vent Tee 22 X 18 Branch

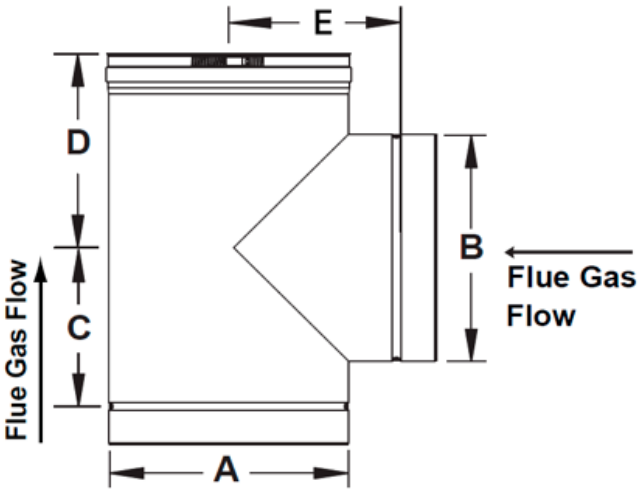

Boot Tee

A	B	C	D	Part Number	Description
3	3.95	7.25	5.75	2SVSTBT03	Z-Vent Boot Tee 3 in
4	4.10	7.95	6.55	2SVSTBT04	Z-Vent Boot Tee 4 in
5	4.75	9.20	7.80	2SVSTBT05	Z-Vent Boot Tee 5 in
6	5.35	10.60	9.10	2SVSTBT06	Z-Vent Boot Tee 6 in
7	6.00	11.70	10.30	2SVSTBT07	Z-Vent Boot Tee 7 in
8	6.55	12.95	11.55	2SVSTBT08	Z-Vent Boot Tee 8 in
9	7.30	14.20	12.80	2SVSTBT09	Z-Vent Boot Tee 9 in
10	7.95	15.45	14.05	2SVSTBT10	Z-Vent Boot Tee 10 in
12	9.20	17.95	17.05	2SVSTBT12	Z-Vent Boot Tee 12 in
14	10.50	21.45	19.05	2SVSTBT14	Z-Vent Boot Tee 14 in
16	11.55	23.95	21.55	2SVSTBT16	Z-Vent Boot Tee 16 in
18	12.95	26.55	24.10	2SVSTBT18	Z-Vent Boot Tee 18 in
20	14.00	28.95	26.50	2SVSTBT20	Z-Vent Boot Tee 20 in
22	15.30	31.70	29.25	2SVSTBT22	Z-Vent Boot Tee 22 in
24	17.00	34.00	31.50	2SVSTBT24	Z-Vent Boot Tee 24 in

A Boot Tee is designed to allow a low flow resistance connection of horizontal and vertical sections. A tee cap is available separately.

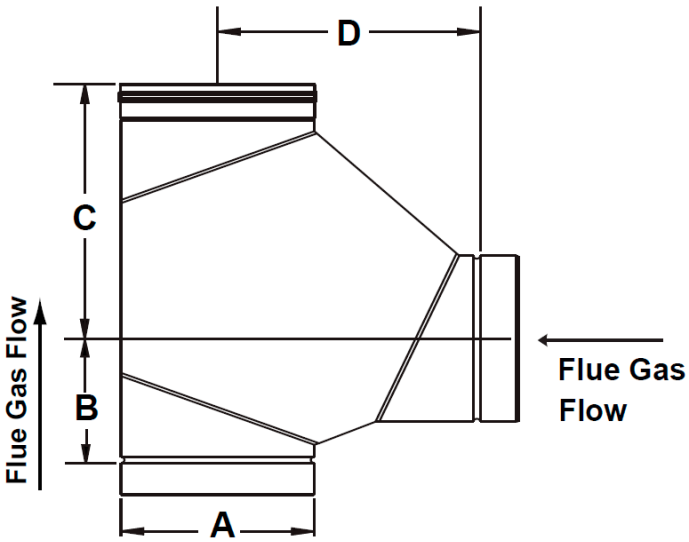

Z-VENT® Single Wall

Boot Tee Reducing Branch

A	B	C	D	E	Part Number	Description
6	3	3.5	7.50	7.25	2SVSTBT0603	Z-Vent Boot Tee 6 X 3 Branch
8	6	5.0	10.4	9.65	2SVSTBT0806	Z-Vent Boot Tee 8 X 6 Branch
10	4	4.6	10	11.25	2SVSTBT1004	Z-Vent Boot Tee 10 X 4 Branch
10	6	5.16	11.44	11.625	2SVSTBT1006	Z-Vent Boot Tee 10 X 6 Branch
10	8	6.38	13.0	12.25	2SVSTBT1008	Z-Vent Boot Tee 10 X 8 Branch
12	8	6.375	13.0	13.25	2SVSTBT1208	Z-Vent Boot Tee 12 X 8 Branch
12	10	7.5	15.5	14.75	2SVSTBT1210	Z-Vent Boot Tee 12 X 10 Branch
14	6	6.0	13.4	14.7	2SVSTBT1406	Z-Vent Boot Tee 14 X 6 Branch
14	7	5.8	12.75	13.5	2SVSTBT1407	Z-Vent Boot Tee 14 X 7 Branch
14	8	6.45	14	14.25	2SVSTBT1408	Z-Vent Boot Tee 14 X 8 Branch
14	9	7.0	15.25	15.0	2SVSTBT1409	Z-Vent Boot Tee 14 X 9 Branch
14	10	7.75	16.5	15.75	2SVSTBT1410	Z-Vent Boot Tee 14 X 10 Branch
14	12	9.0	19.0	17.25	2SVSTBT1412	Z-Vent Boot Tee 14 X 12 Branch
16	6	6.13	13.13	15.13	2SVSTBT1606	Z-Vent Boot Tee 16 X 6 Branch
16	8	10.62	17.38	17.5	2SVSTBT1608	Z-Vent Boot Tee 16 X 8 Branch
16	10	7.67	16.5	15.78	2SVSTBT1610	Z-Vent Boot Tee 16 X 10 Branch
18	8	7.00	15.18	17.50	2SVSTBT1808	Z-Vent Boot Tee 18 X 8 Branch
18	10	7.9	16.72	18.0	2SVSTBT1810	Z-Vent Boot Tee 18 X 10 Branch
18	12	9.0	19.0	19.25	2SVSTBT1812	Z-Vent Boot Tee 18 X 12 Branch
18	16	13.13	24.0	22.25	2SVSTBT1816	Z-Vent Boot Tee 18 X 16 Branch
20	10	8.0	16.8	19.0	2SVSTBT2010	Z-Vent Boot Tee 20 X 10 Branch
20	14	10.25	21.5	22.0	2SVSTBT2014	Z-Vent Boot Tee 20 X 14 Branch
22	10	10.0	20.75	23.5	2SVSTBT2210	Z-Vent Boot Tee 22 X 10 Branch

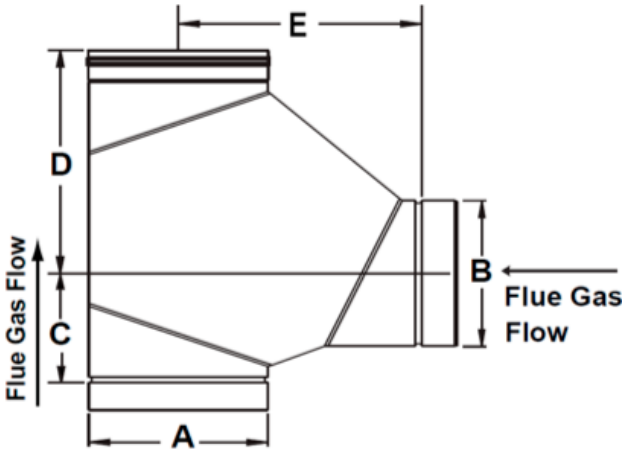

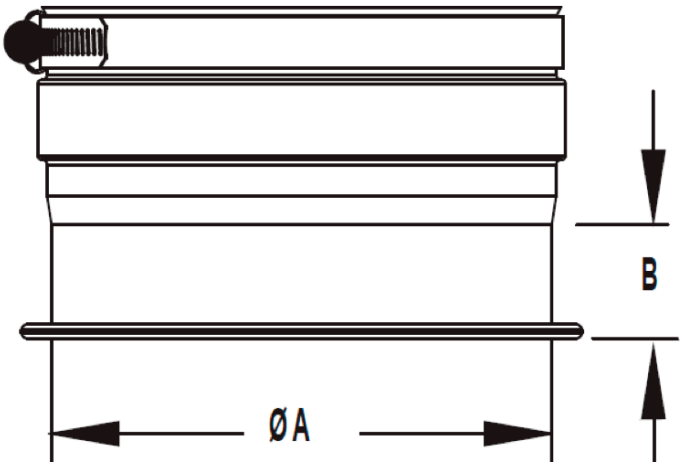

Tee Cap

A	B	Part Number	Description
3	2	2SVSTC03	Z-Vent Tee Cap 3 in
4	2	2SVSTC04	Z-Vent Tee Cap 4 in
5	2.25	2SVSTC05	Z-Vent Tee Cap 5 in
6	2.25	2SVSTC06	Z-Vent Tee Cap 6 in
7	2.25	2SVSTC07	Z-Vent Tee Cap 7 in
8	2.25	2SVSTC08	Z-Vent Tee Cap 8 in
9	2.25	2SVSTC09	Z-Vent Tee Cap 9 in
10	2.25	2SVSTC10	Z-Vent Tee Cap 10 in
12	2.25	2SVSTC12	Z-Vent Tee Cap 12 in
14	2.25	2SVSTC14	Z-Vent Tee Cap 14 in
16	2.25	2SVSTC16	Z-Vent Tee Cap 16 in
18	2.25	2SVSTC18	Z-Vent Tee Cap 18 in
20	2.25	2SVSTC20	Z-Vent Tee Cap 20 in
22	2.25	2SVSTC22	Z-Vent Tee Cap 22 in
24	2.25	2SVSTC24	Z-Vent Tee Cap 24 in

Tee Cap with Drain

A	B	Part Number	Description
3	3	2SVSTCD03	Z-Vent Tee Cap with Drain 3 in
4	3	2SVSTCD04	Z-Vent Tee Cap with Drain 4 in
5	4	2SVSTCD05	Z-Vent Tee Cap with Drain 5 in
6	4	2SVSTCD06	Z-Vent Tee Cap with Drain 6 in
7	4	2SVSTCD07	Z-Vent Tee Cap with Drain 7 in
8	4	2SVSTCD08	Z-Vent Tee Cap with Drain 8 in
9	4	2SVSTCD09	Z-Vent Tee Cap with Drain 9 in
10	4	2SVSTCD10	Z-Vent Tee Cap with Drain 10 in
12	4	2SVSTCD12	Z-Vent Tee Cap with Drain 12 in
14	4	2SVSTCD14	Z-Vent Tee Cap with Drain 14 in
16	4	2SVSTCD16	Z-Vent Tee Cap with Drain 16 in
18	4	2SVSTCD18	Z-Vent Tee Cap with Drain 18 in
20	4	2SVSTCD20	Z-Vent Tee Cap with Drain 20 in
22	4	2SVSTCD22	Z-Vent Tee Cap with Drain 22 in
24	4	2SVSTCD24	Z-Vent Tee Cap with Drain 24 in

A tee cap with drain is required at the bottom of a vertical stack. High temperature silicone tubing is available separately.

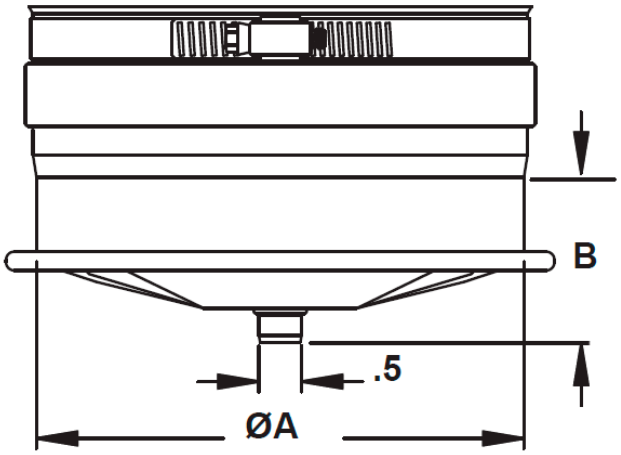

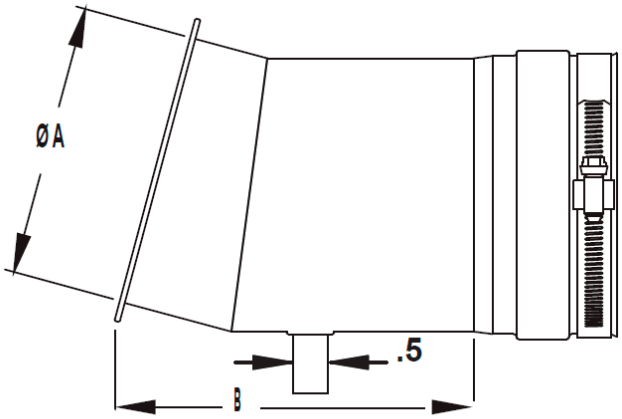

End Cap Drain

A	B	Part Number	Description
4	5.35	2SVSECD04	Z-Vent Horizontal End Cap w/Drain 4in
5	5.35	2SVSECD05	Z-Vent Horizontal End Cap w/Drain 5in
6	5.58	2SVSECD06	Z-Vent Horizontal End Cap w/Drain 6in
7	5.85	2SVSECD07	Z-Vent Horizontal End Cap w/Drain 7in
8	6.125	2SVSECD08	Z-Vent Horizontal End Cap w/Drain 8in
9	6.63	2SVSECD09	Z-Vent Horizontal End Cap w/Drain 9in
10	6.65	2SVSECD10	Z-Vent Horizontal End Cap w/Drain 10in
12	7.17	2SVSECD12	Z-Vent Horizontal End Cap w/Drain 12in
14	7.7	2SVSECD14	Z-Vent Horizontal End Cap w/Drain 14in
16	8.15	2SVSECD16	Z-Vent Horizontal End Cap w/Drain 16in
18	8.68	2SVSECD18	Z-Vent Horizontal End Cap w/Drain 18in
20	9.23	2SVSECD20	Z-Vent Horizontal End Cap w/Drain 20in
22	9.28	2SVSECD22	Z-Vent Horizontal End Cap w/Drain 22in
24	9.57	2SVSECD24	Z-Vent Horizontal End Cap w/Drain 24in

Z-VENT® Single Wall

Horizontal Drain Pipe

A	B	Part Number	Description
3	7.25	2SVEDWC(F)03	Z-Vent Drain Pipe Horizontal 3 in
4	7.25	2SVEDWC(F)04	Z-Vent Drain Pipe Horizontal 4 in
5	7.25	2SVEDWC05	Z-Vent Drain Pipe Horizontal 5 in

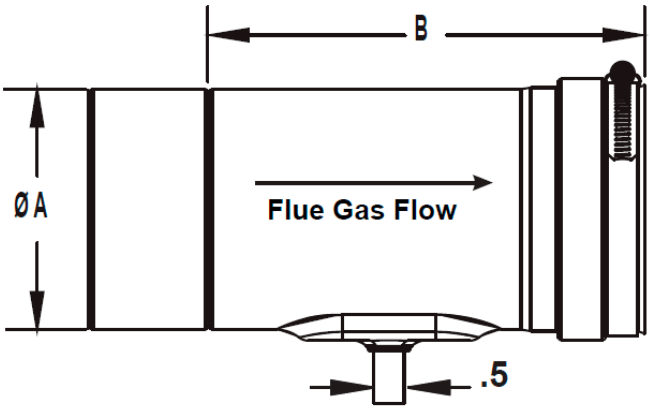

Vertical Drain Tee with Cap

A	B	C	D	Part Number	Description
3	3	3.84	5.9	2SVEVWC(F)03	Z-Vent Vertical Drain Tee w/Cap 3 in
4	3.5	3.94	6	2SVEVWC(F)04	Z-Vent Vertical Drain Tee w/Cap 4 in

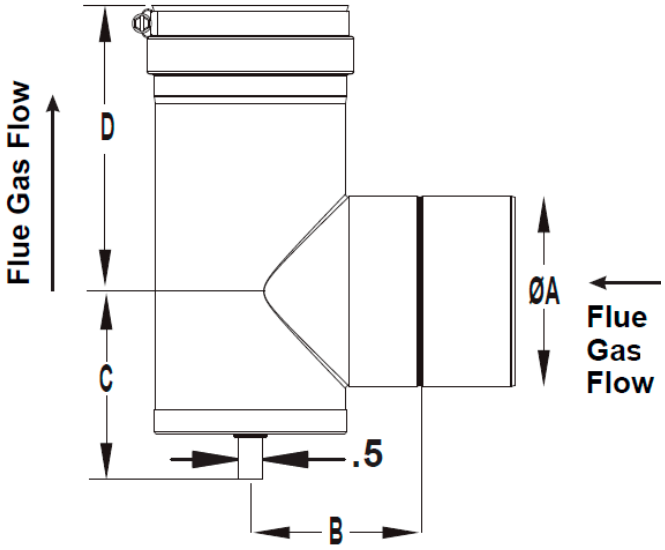

Vertical / Horizontal Drain Pipe

A	B	Part Number	Description
3	5.75	2SVEVDP03	Z-Vent Vertical/Horizontal Drain Pipe 3"
4	5.75	2SVEVDP04	Z-Vent Vertical/Horizontal Drain Pipe 4"
5	5.75	2SVEVDP05	Z-Vent Vertical/Horizontal Drain Pipe 5"
6	5.75	2SVEVDP06	Z-Vent Vertical/Horizontal Drain Pipe 6"
7	5.75	2SVEVDP07	Z-Vent Vertical/Horizontal Drain Pipe 7"
8	5.75	2SVEVDP08	Z-Vent Vertical/Horizontal Drain Pipe 8"
9	5.75	2SVEVDP09	Z-Vent Vertical/Horizontal Drain Pipe 9"
10	5.75	2SVEVDP10	Z-Vent Vertical/Horizontal Drain Pipe 10"
12	5.75	2SVEVDP12	Z-Vent Vertical/Horizontal Drain Pipe 12"
14	6.75	2SVEVDP14	Z-Vent Vertical/Horizontal Drain Pipe 14"
16	6.75	2SVEVDP16	Z-Vent Vertical/Horizontal Drain Pipe 16"
18	6.75	2SVEVDP18	Z-Vent Vertical/Horizontal Drain Pipe 18"
20	6.75	2SVEVDP20	Z-Vent Vertical/Horizontal Drain Pipe 20"
22	6.75	2SVEVDP22	Z-Vent Vertical/Horizontal Drain Pipe 22"
24	6.75	2SVEVDP24	Z-Vent Vertical/Horizontal Drain Pipe 24"

Used to drain condensate from the Vent system. High temperature Drain Tube kit sold separately.

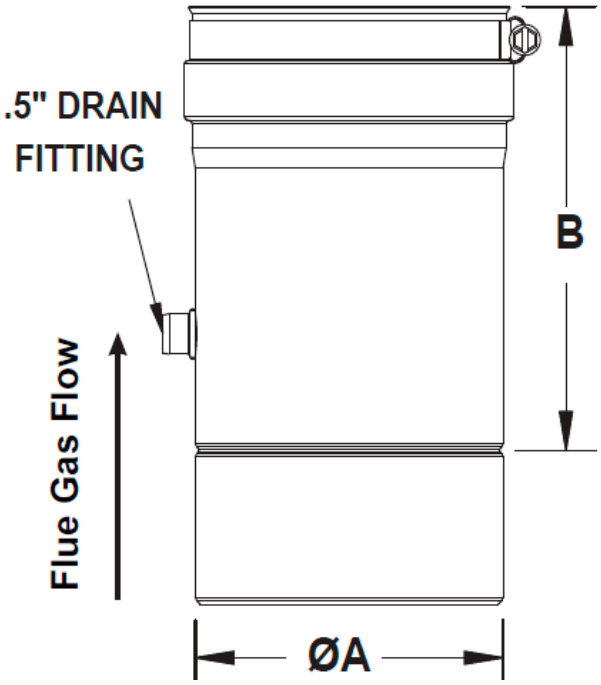

Used to limit back drafts on off appliances, especially helpful on appliances with low mass heat exchangers (water heaters, boilers, etc.) in cold climates. Not a damper with 100% shutoff

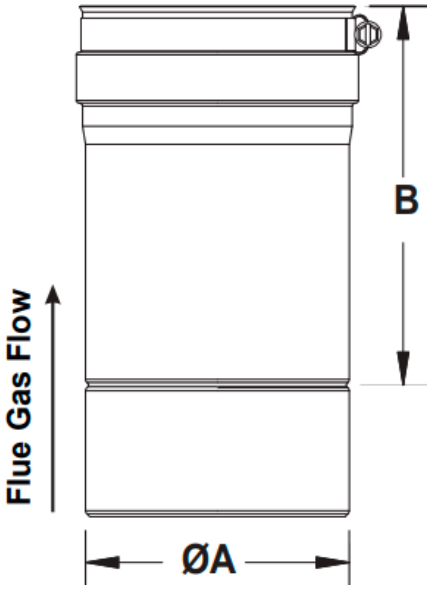

Backflow Preventer

A	B	Part Number	Description
3	3.75	2ZVBP03	Z-Vent Backflow Preventer 3"
4	3.75	2ZVBP04	Z-Vent Backflow Preventer 4"

Z-VENT® Single Wall

Available in diameters 3in to 24in and standard lengths up to 10ft (3in and 4in diameter only). Pipe can be cut to length. The female end of each **Z-VENT®** component incorporates a *Double Fail Safe™* self sealing gasket. Examine all components to ensure that gasket integrity has remained during shipping. Gaskets must be in proper position or flue gases could leak resulting in carbon monoxide poisoning. The installation shall be in accordance with the manufacturer's installation instructions.

Pipe

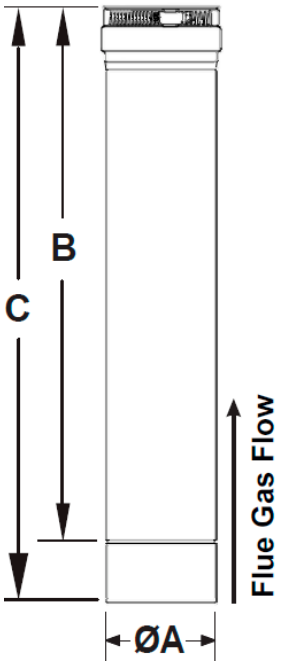

A	B	C	Part Number	Description	
3in	3.75	5.75	2SVEPWC(F)03.5	Z-Vent Pipe	3in x 6in
	9.75	11.75	2SVEPWC(F)0301	Z-Vent Pipe	3in x 1 ft
	15.75	17.75	2SVEPWC(F)0301.5	Z-Vent Pipe	3in x 1.5ft
	21.75	23.75	2SVEPWC(F)0302	Z-Vent Pipe	3in x 2ft
	33.75	35.75	2SVEPWC(F)0303	Z-Vent Pipe	3in x 3ft
	45.75	47.75	2SVEPWC(F)0304	Z-Vent Pipe	3in x 4ft
	57.75	59.75	2SVEPWC(F)0305	Z-Vent Pipe	3in x 5ft
	93.75	95.75	2SVEPWC(F)0308	Z-Vent Pipe	3in x 8ft
	117.75	119.75	2SVEPWC(F)0310	Z-Vent Pipe	3in x 10ft
4in	3.75	5.75	2SVEPWC(F)04.5	Z-Vent Pipe	4in x 6in
	9.75	11.75	2SVEPWC(F)0401	Z-Vent Pipe	4in x 1 ft
	15.75	17.75	2SVEPWC(F)0401.5	Z-Vent Pipe	4in x 1.5ft
	21.75	23.75	2SVEPWC(F)0402	Z-Vent Pipe	4in x 2ft
	33.75	35.75	2SVEPWC(F)0403	Z-Vent Pipe	4in x 3ft
	45.75	47.75	2SVEPWC(F)0404	Z-Vent Pipe	4in x 4ft
	57.75	59.75	2SVEPWC(F)0405	Z-Vent Pipe	4in x 5ft
	69.75	71.75	2SVEPWC(F)0406	Z-Vent Pipe	4in x 6ft
	93.75	95.75	2SVEPWC(F)0408	Z-Vent Pipe	4in x 8ft
	117.75	119.75	2SVEPWC(F)0410	Z-Vent Pipe	4in x 10ft
5in	3.75	5.75	2SVEPWC05.5	Z-Vent Pipe	5in x 6in
	9.75	11.75	2SVEPWC0501	Z-Vent Pipe	5in x 1 ft
	15.75	17.75	2SVEPWC0501.5	Z-Vent Pipe	5in x 1.5ft
	21.75	23.75	2SVEPWC0502	Z-Vent Pipe	5in x 2ft
	33.75	35.75	2SVEPWC0503	Z-Vent Pipe	5in x 3ft
	45.75	47.75	2SVEPWC0504	Z-Vent Pipe	5in x 4ft
6in	3.75	5.75	2SVEP06.5	Z-Vent Pipe	6in x 6in
	9.75	11.75	2SVEP0601	Z-Vent Pipe	6in x 1 ft
	15.75	17.75	2SVEP0601.5	Z-Vent Pipe	6in x 1.5ft
	21.75	23.75	2SVEP0602	Z-Vent Pipe	6in x 2ft
	33.75	35.75	2SVEP0603	Z-Vent Pipe	6in x 3ft
	45.75	47.75	2SVEP0604	Z-Vent Pipe	6in x 4ft
7in	3.75	5.75	2SVEP07.5	Z-Vent Pipe	7in x 6in
	9.75	11.75	2SVEP0701	Z-Vent Pipe	7in x 1 ft
	15.75	17.75	2SVEP0701.5	Z-Vent Pipe	7in x 1.5ft
	21.75	23.75	2SVEP0702	Z-Vent Pipe	7in x 2ft
	33.75	35.75	2SVEP0703	Z-Vent Pipe	7in x 3ft
	45.75	47.75	2SVEP0704	Z-Vent Pipe	7in x 4ft
8in	3.75	5.75	2SVEP08.5	Z-Vent Pipe	8in x 6in
	9.75	11.75	2SVEP0801	Z-Vent Pipe	8in x 1 ft
	15.75	17.75	2SVEP0801.5	Z-Vent Pipe	8in x 1.5ft
	21.75	23.75	2SVEP0802	Z-Vent Pipe	8in x 2ft
	33.75	35.75	2SVEP0803	Z-Vent Pipe	8in x 3ft
	45.75	47.75	2SVEP0804	Z-Vent Pipe	8in x 4ft

A	B	C	Part Number	Description	
9in	3.75	5.75	2SVEP09.5	Z-Vent Pipe	9in x 6in
	9.75	11.75	2SVEP0901	Z-Vent Pipe	9in x 1 ft
	15.75	17.75	2SVEP0901.5	Z-Vent Pipe	9in x 1.5ft
	21.75	23.75	2SVEP0902	Z-Vent Pipe	9in x 2ft
	33.75	35.75	2SVEP0903	Z-Vent Pipe	9in x 3ft
10in	3.75	5.75	2SVEP10.5	Z-Vent Pipe	10in x 6in
	9.75	11.75	2SVEP1001	Z-Vent Pipe	10in x 1 ft
	15.75	17.75	2SVEP1001.5	Z-Vent Pipe	10in x 1.5ft
	21.75	23.75	2SVEP1002	Z-Vent Pipe	10in x 2ft
	33.75	35.75	2SVEP1003	Z-Vent Pipe	10in x 3ft
12in	3.75	5.75	2SVEP12.5	Z-Vent Pipe	12in x 6in
	9.75	11.75	2SVEP1201	Z-Vent Pipe	12in x 1 ft
	15.75	17.75	2SVEP1201.5	Z-Vent Pipe	12in x 1.5ft
	21.75	23.75	2SVEP1202	Z-Vent Pipe	12in x 2ft
	33.75	35.75	2SVEP1203	Z-Vent Pipe	12in x 3ft
14in	5.75	8.75	2SVEP14.5	Z-Vent Pipe	14in x 6in
	8.75	11.75	2SVEP1401	Z-Vent Pipe	14in x 1 ft
	14.75	17.75	2SVEP1401.5	Z-Vent Pipe	14in x 1.5ft
	20.75	23.75	2SVEP1402	Z-Vent Pipe	14in x 2ft
	32.75	35.75	2SVEP1403	Z-Vent Pipe	14in x 3ft
16in	5.75	8.75	2SVEP16.5	Z-Vent Pipe	16in x 6in
	8.75	11.75	2SVEP1601	Z-Vent Pipe	16in x 1 ft
	14.75	17.75	2SVEP1601.5	Z-Vent Pipe	16in x 1.5ft
	20.75	23.75	2SVEP1602	Z-Vent Pipe	16in x 2ft
	32.75	35.75	2SVEP1603	Z-Vent Pipe	16in x 3ft
18in	5.75	8.75	2SVEP18.5	Z-Vent Pipe	18in x 6in
	8.75	11.75	2SVEP1801	Z-Vent Pipe	18in x 1 ft
	14.75	17.75	2SVEP1801.5	Z-Vent Pipe	18in x 1.5ft
	20.75	23.75	2SVEP1802	Z-Vent Pipe	18in x 2ft
	32.75	35.75	2SVEP1803	Z-Vent Pipe	18in x 3ft
20in	5.75	8.75	2SVEP20.5	Z-Vent Pipe	20in x 6in
	8.75	11.75	2SVEP2001	Z-Vent Pipe	20in x 1 ft
	14.75	17.75	2SVEP2001.5	Z-Vent Pipe	20in x 1.5ft
	20.75	23.75	2SVEP2002	Z-Vent Pipe	20in x 2ft
	32.75	35.75	2SVEP2003	Z-Vent Pipe	20in x 3ft
22in	5.75	8.75	2SVEP22.5	Z-Vent Pipe	22in x 6in
	8.75	11.75	2SVEP2201	Z-Vent Pipe	22in x 1 ft
	14.75	17.75	2SVEP2201.5	Z-Vent Pipe	22in x 1.5ft
	20.75	23.75	2SVEP2202	Z-Vent Pipe	22in x 2ft
	32.75	35.75	2SVEP2203	Z-Vent Pipe	22in x 3ft
24in	5.75	8.75	2SVEP24.5	Z-Vent Pipe	24in x 6in
	8.75	11.75	2SVEP2401	Z-Vent Pipe	24in x 1 ft
	14.75	17.75	2SVEP2401.5	Z-Vent Pipe	24in x 1.5ft
	20.75	23.75	2SVEP2402	Z-Vent Pipe	24in x 2ft
	32.75	35.75	2SVEP2403	Z-Vent Pipe	24in x 3ft

Adjustable Pipe

A	B	C	Part Number	Description
3	7	9.9	2SVSALS3	Z-Vent Adjustable Pipe 3 in
3	9	13.9	2SVSALM3	Z-Vent Adjustable Pipe 3 in
4	7	9.9	2SVSALS4	Z-Vent Adjustable Pipe 4 in
4	9	13.9	2SVSALM4	Z-Vent Adjustable Pipe 4 in
5	2*	15.75	2SVSPA05	Z-Vent Adjustable Pipe 5 in
6	2*	15.75	2SVSPA06	Z-Vent Adjustable Pipe 6 in
7	2*	15.75	2SVSPA07	Z-Vent Adjustable Pipe 7 in
8	2*	15.75	2SVSPA08	Z-Vent Adjustable Pipe 8 in
9	2*	15.75	2SVSPA09	Z-Vent Adjustable Pipe 9 in
10	2*	15.75	2SVSPA10	Z-Vent Adjustable Pipe 10 in
12	2*	15.75	2SVSPA12	Z-Vent Adjustable Pipe 12 in
14	3*	14.75	2SVSPA14	Z-Vent Adjustable Pipe 14 in
16	3*	14.75	2SVSPA16	Z-Vent Adjustable Pipe 16 in
18	3*	14.75	2SVSPA18	Z-Vent Adjustable Pipe 18 in
20	3*	14.75	2SVSPA20	Z-Vent Adjustable Pipe 20 in
22	3*	14.75	2SVSPA22	Z-Vent Adjustable Pipe 22 in
24	3*	14.75	2SVSPA24	Z-Vent Adjustable Pipe 24 in

The use of adjustable pipe may be required when the system must be located within extremely tight installation parameters. ***IMPORTANT:*** **Adjustable pipe can only be used with an adjacent pipe. Minimum 18" Long adjacent pipe required for full adjustment range. Not to be inserted into fittings.*

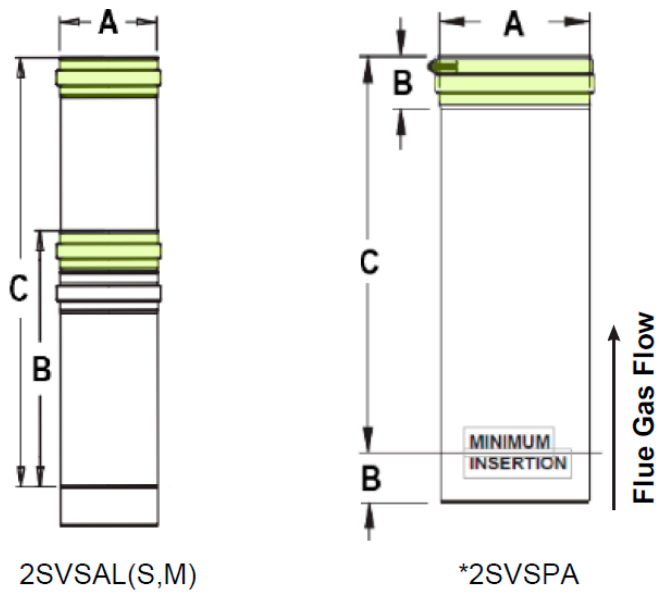

Vent length with test port allows easy access for flue gas analysis.

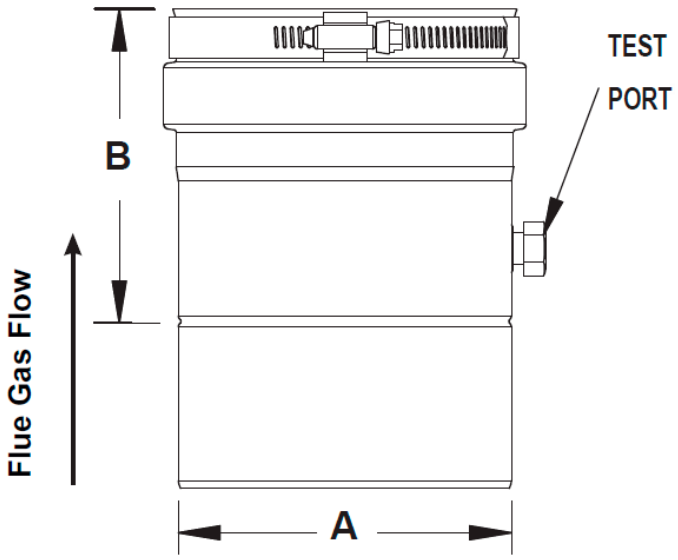

Pipe with Inspection Port

A	B	Part Number	Description
3	3.75	2SVSPRT03.5	Z-Vent Inspection Port Pipe 3 in
4	3.75	2SVSPRT04.5	Z-Vent Inspection Port Pipe 4 in
5	3.75	2SVSPRT05.5	Z-Vent Inspection Port Pipe 5 in
6	3.75	2SVSPRT06.5	Z-Vent Inspection Port Pipe 6 in
7	3.75	2SVSPRT07.5	Z-Vent Inspection Port Pipe 7 in
8	3.75	2SVSPRT08.5	Z-Vent Inspection Port Pipe 8 in
9	3.75	2SVSPRT09.5	Z-Vent Inspection Port Pipe 9 in
10	3.75	2SVSPRT10.5	Z-Vent Inspection Port Pipe 10 in
12	3.75	2SVSPRT12.5	Z-Vent Inspection Port Pipe 12 in
14	4.75	2SVSPRT14.5	Z-Vent Inspection Port Pipe 14 in
16	4.75	2SVSPRT16.5	Z-Vent Inspection Port Pipe 16 in
18	4.75	2SVSPRT18.5	Z-Vent Inspection Port Pipe 18 in
20	4.75	2SVSPRT20.5	Z-Vent Inspection Port Pipe 20 in
22	4.75	2SVSPRT22.5	Z-Vent Inspection Port Pipe 22 in
24	4.75	2SVSPRT24.5	Z-Vent Inspection Port Pipe 24 in

Z-VENT® Single Wall

15° Elbows

A	B	C	Part Number	Description
3	2.45	4.20	2SVEEWC0315	Z-Vent Elbow 15° x 3 in
4	2.51	4.26	2SVEEWC0415	Z-Vent Elbow 15° x 4 in
5	2.58	4.33	2SVEEWC0515	Z-Vent Elbow 15° x 5 in
6	2.64	4.39	2SVEE0615	Z-Vent Elbow 15° x 6 in
7	2.71	4.46	2SVEE0715	Z-Vent Elbow 15° x 7 in
8	2.78	4.53	2SVEE0815	Z-Vent Elbow 15° x 8 in
9	2.84	4.59	2SVEE0915	Z-Vent Elbow 15° x 9 in
10	2.91	4.66	2SVEE1015	Z-Vent Elbow 15° x 10 in
12	3.04	4.79	2SVEE1215	Z-Vent Elbow 15° x 12 in
14	3.17	5.92	2SVEE1415	Z-Vent Elbow 15° x 14 in
16	3.30	6.05	2SVEE1615	Z-Vent Elbow 15° x 16 in
18	3.43	6.18	2SVEE1815	Z-Vent Elbow 15° x 18 in
20	3.57	6.32	2SVEE2015	Z-Vent Elbow 15° x 20 in
22	3.70	6.45	2SVEE2215	Z-Vent Elbow 15° x 22 in
24	3.83	6.58	2SVEE2415	Z-Vent Elbow 15° x 24 in

15° elbows are used when a direction change or offset is required.

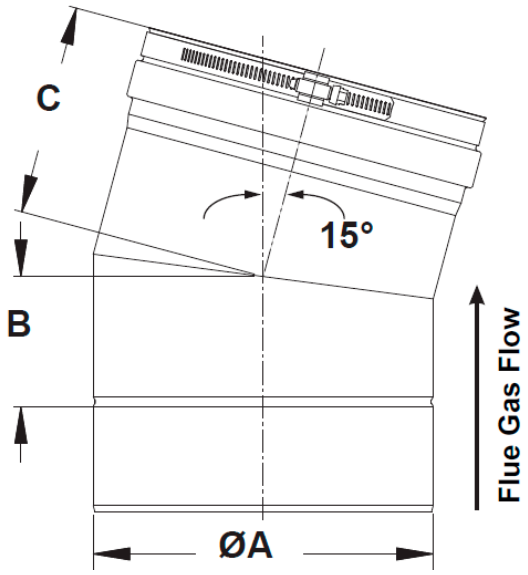

30° elbows are used when a direction change or offset is required.

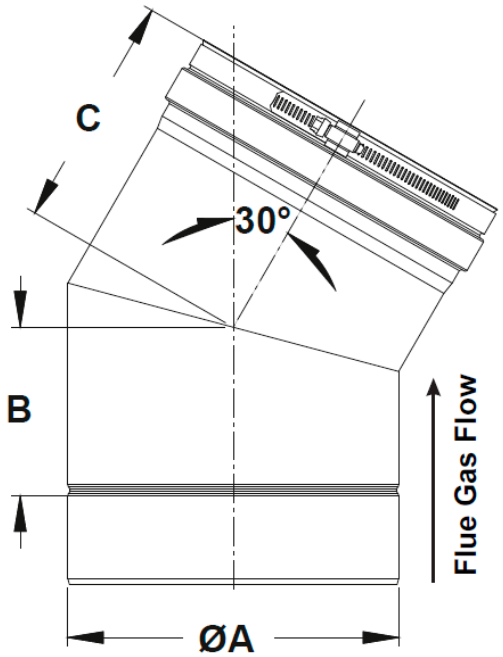

30° Elbows

A	B	C	Part Number	Description
3	2.65	4.40	2SVEEWC0330	Z-Vent Elbow 30° X 3 in
4	2.79	4.54	2SVEEWC0430	Z-Vent Elbow 30° X 4 in
5	2.92	4.67	2SVEEWC0530	Z-Vent Elbow 30° X 5 in
6	3.05	4.80	2SVEE0630	Z-Vent Elbow 30° X 6 in
7	3.19	4.94	2SVEE0730	Z-Vent Elbow 30° X 7 in
8	3.32	5.07	2SVEE0830	Z-Vent Elbow 30° X 8 in
9	3.46	5.21	2SVEE0930	Z-Vent Elbow 30° X 9 in
10	3.59	5.35	2SVEE1030	Z-Vent Elbow 30° X 10 in
12	3.86	5.61	2SVEE1230	Z-Vent Elbow 30° X 12 in
14	4.38	6.88	2SVEE1430	Z-Vent Elbow 30° X 14 in
16	4.64	7.14	2SVEE1630	Z-Vent Elbow 30° X 16 in
18	4.91	7.41	2SVEE1830	Z-Vent Elbow 30° X 18 in
20	5.18	7.68	2SVEE2030	Z-Vent Elbow 30° X 20 in
22	5.45	7.95	2SVEE2230	Z-Vent Elbow 30° X 22 in
24	5.72	8.22	2SVEE2430	Z-Vent Elbow 30° X 24 in

45° Elbows

A	B	C	Part Number	Description
3	1.62	3.37	2SVEEWC(F)0345	Z-Vent Elbow 45° X 3 in
4	1.83	3.58	2SVEEWC(F)0445	Z-Vent Elbow 45° X 4 in
5	4.16	5.91	2SVEEWC0545	Z-Vent Elbow 45° X 5 in
6	4.37	6.12	2SVEE0645	Z-Vent Elbow 45° X 6 in
7	4.58	6.33	2SVEE0745	Z-Vent Elbow 45° X 7 in
8	4.79	6.54	2SVEE0845	Z-Vent Elbow 45° X 8 in
9	5.00	6.75	2SVEE0945	Z-Vent Elbow 45° X 9 in
10	5.20	6.96	2SVEE1045	Z-Vent Elbow 45° X 10 in
12	5.61	7.36	2SVEE1245	Z-Vent Elbow 45° X 12 in
14	6.03	8.78	2SVEE1445	Z-Vent Elbow 45° X 14 in
16	6.44	9.19	2SVEE1645	Z-Vent Elbow 45° X 16 in
18	6.86	9.61	2SVEE1845	Z-Vent Elbow 45° X 18 in
20	7.27	10.02	2SVEE2045	Z-Vent Elbow 45° X 20 in
22	7.69	10.44	2SVEE2245	Z-Vent Elbow 45° X 22 in
24	8.10	10.85	2SVEE2445	Z-Vent Elbow 45° X 24 in

45° elbow is used when a direction change or offset is required.

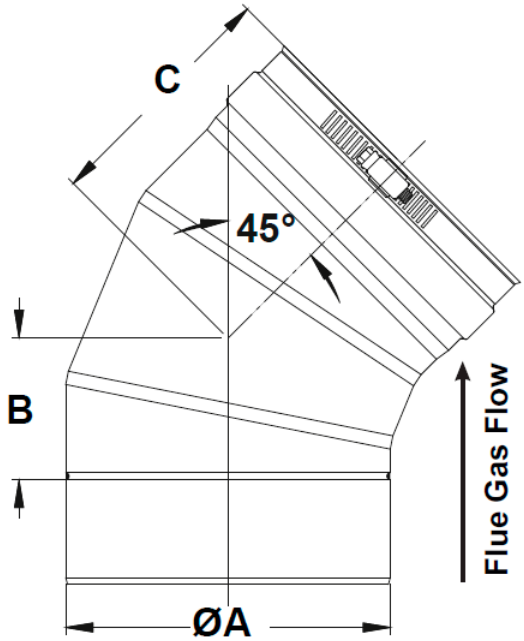

90° elbow is are used when a direction change or offset is required.

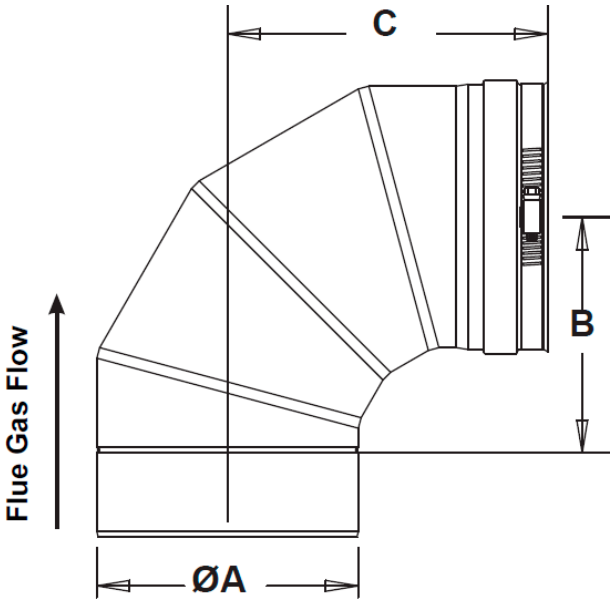

90° Elbows

A	B	C	Part Number	Description
3	4.72	6.18	2SVEEWC(F)0390	Z-Vent Elbow 90° X 3 in
4	5.22	6.66	2SVEEWC(F)0490	Z-Vent Elbow 90° X 4 in
5	6.63	8.32	2SVEEWC0590	Z-Vent Elbow 90° X 5 in
6	7.50	9.28	2SVEE0690	Z-Vent Elbow 90° X 6 in
7	8.28	9.84	2SVEE0790	Z-Vent Elbow 90° X 7 in
8	8.13	9.85	2SVEE0890	Z-Vent Elbow 90° X 8 in
9	8.50	10.25	2SVEE0990	Z-Vent Elbow 90° X 9 in
10	9.50	11.20	2SVEE1090	Z-Vent Elbow 90° X 10 in
12	10.50	12.20	2SVEE1290	Z-Vent Elbow 90° X 12 in
14	11.15	12.75	2SVEE1490	Z-Vent Elbow 90° X 14 in
16	12.00	14.53	2SVEE1690	Z-Vent Elbow 90° X 16 in
18	13.00	15.58	2SVEE1890	Z-Vent Elbow 90° X 18 in
20	14.50	17.00	2SVEE2090	Z-Vent Elbow 90° X 20 in
22	16.00	19.00	2SVEE2290	Z-Vent Elbow 90° X 22 in
24	18.66	21.20	2SVEE2490	Z-Vent Elbow 90° X 24 in

Z-VENT® Single Wall

Low Resistance Rain Cap

A	C	D	Part Number	Description
5	7.5	11	2SVSRC05	Low Resistance Rain Cap 5in
6	8	12.75	2SVSRC06	Low Resistance Rain Cap 6in
7	8.5	14	2SVSRC07	Low Resistance Rain Cap 7in
8	9	15	2SVSRC08	Low Resistance Rain Cap 8in
9	9.5	18.5	2SVSRC09	Low Resistance Rain Cap 9in
10	10.38	18.5	2SVSRC10	Low Resistance Rain Cap 10in
12	12	22.5	2SVSRC12	Low Resistance Rain Cap 12in
14	13	25.75	2SVSRC14	Low Resistance Rain Cap 14in
16	13.5	28.8	2SVSRC16	Low Resistance Rain Cap 16in
18	15	32.4	2SVSRC18	Low Resistance Rain Cap 18in
20	15.5	34.4	2SVSRC20	Low Resistance Rain Cap 20in
22	15.5	36	2SVSRC22	Low Resistance Rain Cap 22in
24	15.5	37.88	2SVSRC24	Low Resistance Rain Cap 24in

A low resistance rain cap is designed to terminate a vertical stack and prevent the entrance of debris or rain into the vent. It also proves low resistance to flue gas flow.

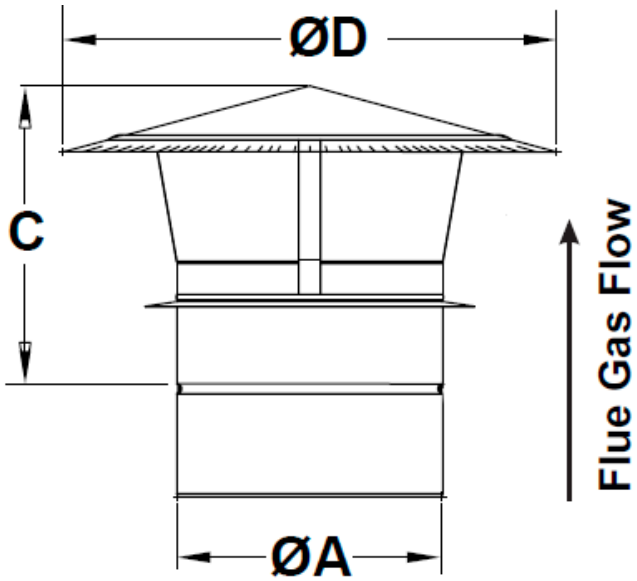

A rain cap is designed to terminate a vertical stack and prevent the entrance of debris or rain into the vent. Includes wind band to prevent draft loss.

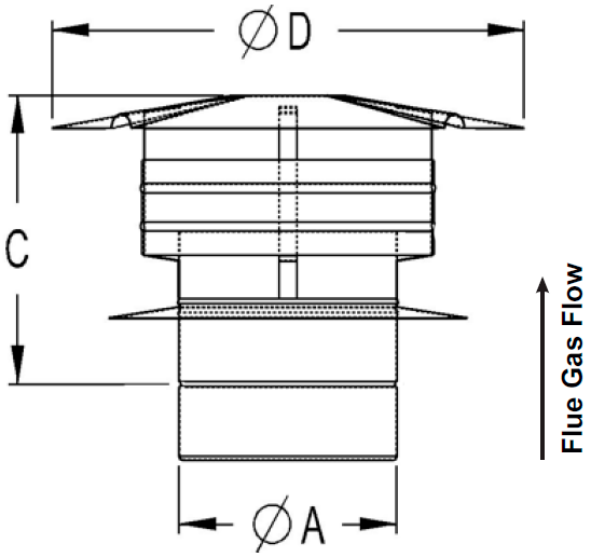

Rain Cap with Wind Band

A	C	D	Part Number	Description
3	7.38	9	2SVSRC(F,X)03	Rain Cap w/wind band 3in
4	7.38	9	2SVSRC(F,X)04	Rain Cap w/wind band 4in
5	7.38	9	2SVSRCX05	Rain Cap w/wind band 5in
6	9.5	12	2SVSRCX06	Rain Cap w/wind band 6in
7	9.5	12	2SVSRCX07	Rain Cap w/wind band 7in
8	9.5	15	2SVSRCX08	Rain Cap w/wind band 8in
9	11.5	18.5	2SVSRCX09	Rain Cap w/wind band 9in
10	11.5	18.5	2SVSRCX10	Rain Cap w/wind band 10in
12	12	21	2SVSRCX12	Rain Cap w/wind band 12in
14	13.5	23	2SVSRCX14	Rain Cap w/wind band 14in
16	13.5	25	2SVSRCX16	Rain Cap w/wind band 16in
18	14.25	29.63	2SVSRCX18	Rain Cap w/wind band 18in
20	15	31.5	2SVSRCX20	Rain Cap w/wind band 20in
22	15.25	33.5	2SVSRCX22	Rain Cap w/wind band 22in
24	15.5	34.5	2SVSRCX24	Rain Cap w/wind band 24in

Extreme Weather Rain Cap

A	B	C	Part Number	Description
3	5	7	2SVSHRC03	Z-Vent Extreme Weather Rain Cap 3 in
4	5	8	2SVSHRC04	Z-Vent Extreme Weather Rain Cap 4 in

Rain cap is designed to terminate a vertical stack and prevent the entrance of debris or rain into the vent.

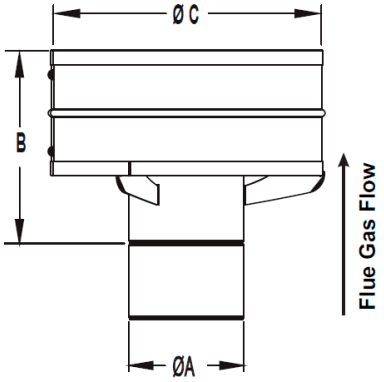

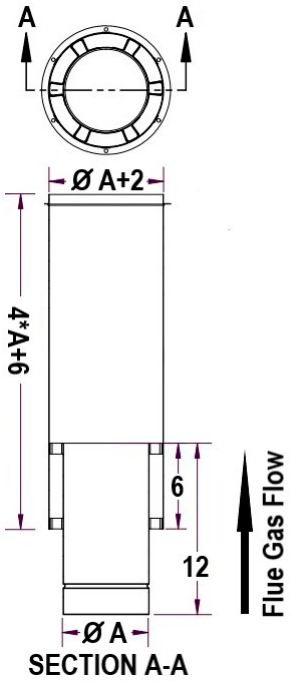

Termination No Loss Stack

A	Part Number	Description
4	2SVSTNLS04	Z-Vent Termination No Loss Stack
5	2SVSTNLS05	Z-Vent Termination No Loss Stack
6	2SVSTNLS06	Z-Vent Termination No Loss Stack
8	2SVSTNLS08	Z-Vent Termination No Loss Stack
10	2SVSTNLS10	Z-Vent Termination No Loss Stack
12	2SVSTNLS12	Z-Vent Termination No Loss Stack

Exit Cone

A	B	C	Part Number	Description
3	2.50	8.00	2SVSXITC03	Z-Vent Exit Cone 3 in
4	3.25	8.40	2SVSXITC04	Z-Vent Exit Cone 4 in
5	4.07	8.62	2SVSXITC05	Z-Vent Exit Cone 5 in
6	4.87	9.25	2SVSXITC06	Z-Vent Exit Cone 6 in
7	5.69	9.88	2SVSXITC07	Z-Vent Exit Cone 7 in
8	6.50	10.40	2SVSXITC08	Z-Vent Exit Cone 8 in
9	7.31	10.88	2SVSXITC09	Z-Vent Exit Cone 9 in
10	8.125	11.25	2SVSXITC10	Z-Vent Exit Cone 10 in
12	9.88	12.75	2SVSXITC12	Z-Vent Exit Cone 12 in
14	11.75	13.63	2SVSXITC14	Z-Vent Exit Cone 14 in
16	13.25	14.63	2SVSXITC16	Z-Vent Exit Cone 16 in
18	14.75	15.63	2SVSXITC18	Z-Vent Exit Cone 18 in
20	16.50	16.63	2SVSXITC20	Z-Vent Exit Cone 20 in
22	18.00	17.63	2SVSXITC22	Z-Vent Exit Cone 22 in
24	19.50	18.63	2SVSXITC24	Z-Vent Exit Cone 24 in

Designed to increase stack velocity. Extremely low resistance. It is recommended to use a tee cap with drain at base of stack.

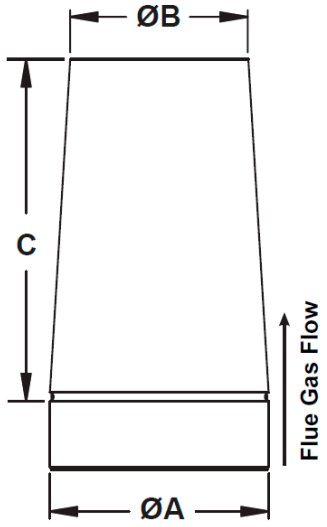

Z-VENT® Single Wall

Termination Tee

A	B	C	Part Number	Description
3	3.05	3	2SVSTT(F,X)03	Z-Vent Termination Tee 3 in
4	2.75	3.5	2SVSTT(F,X)04	Z-Vent Termination Tee 4 in
5	4.5	6.94	2SVSTTX05	Z-Vent Termination Tee 5 in
6	5	7.42	2SVSTTX06	Z-Vent Termination Tee 6 in
7	5.5	7.92	2SVSTTX07	Z-Vent Termination Tee 7 in
8	6	8.75	2SVSTTX08	Z-Vent Termination Tee 8 in
10	7	8.5	2SVSTTX10	Z-Vent Termination Tee 10 in
12	8	10	2SVSTTX12	Z-Vent Termination Tee 12 in

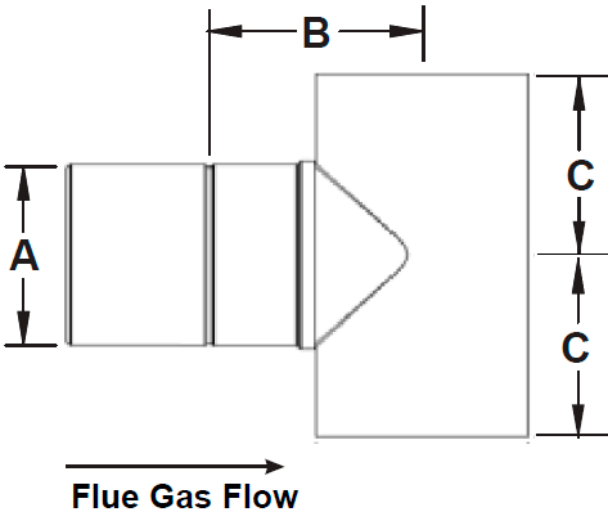

A wall termination is used to terminate a horizontal vent. The special design resists winds from affecting flue gas flow.

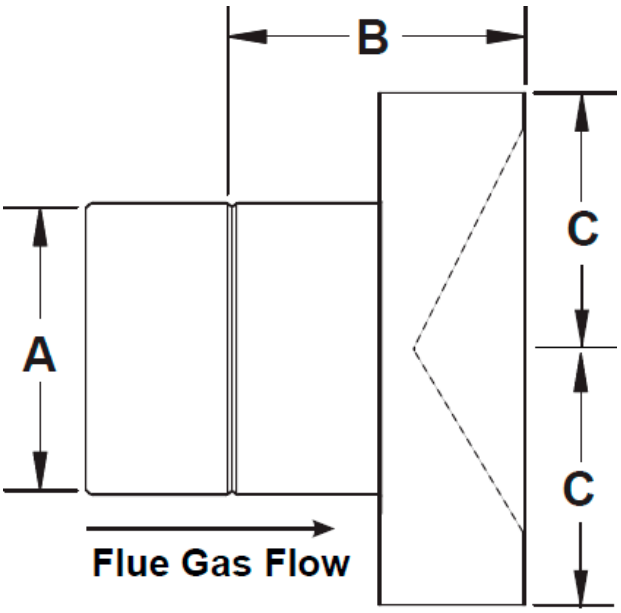

Wall Termination Box

A	B	C	Part Number	Description
3	9	2.5	2SVSTB03	Z-Vent Termination Box 3 in
4	9	3	2SVSTB04	Z-Vent Termination Box 4 in
3	3	2.5	2SVSRTX03	Z-Vent Termination Box 3 in
4	3	3	2SVSRTX04	Z-Vent Termination Box 4 in
5	3.07	3.5	2SVSRTX05	Z-Vent Termination Box 5 in
6	3.38	4	2SVSRTX06	Z-Vent Termination Box 6 in
7	3.63	4.5	2SVSRTX07	Z-Vent Termination Box 7 in
8	3.88	5	2SVSRTX08	Z-Vent Termination Box 8 in
9	4.07	5.5	2SVSRTX09	Z-Vent Termination Box 9 in
10	4.50	6	2SVSRTX10	Z-Vent Termination Box 10 in
12	5.13	7	2SVSRTX12	Z-Vent Termination Box 12 in
14	5.63	8	2SVSRTX14	Z-Vent Termination Box 14 in
16	6.13	9	2SVSRTX16	Z-Vent Termination Box 16 in
18	6.25	10	2SVSRTX18	Z-Vent Termination Box 18 in
20	7	11	2SVSRTX20	Z-Vent Termination Box 20 in
22	7.5	12	2SVSRTX22	Z-Vent Termination Box 22 in
24	8	13	2SVSRTX24	Z-Vent Termination Box 24 in

Termination Hood

A	B	C	Part Number	Description
3	6.75	3.75	2SVSHTX03	Z-Vent Termination Hood 3 in
4	7.125	3.75	2SVSHTX04	Z-Vent Termination Hood 4 in
5	7.375	3.75	2SVSHTX05	Z-Vent Termination Hood 5 in

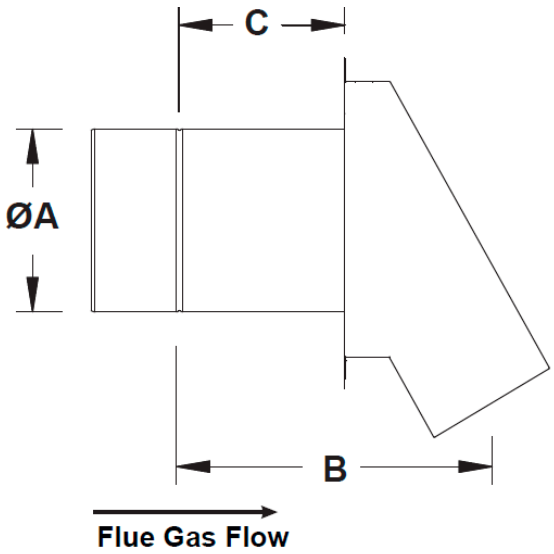

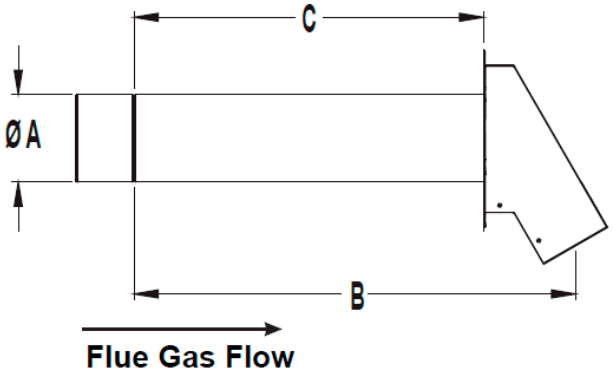

Termination Hood with Damper

A	B	C	Part Number	Description
3	15.15	12	2SVSHTD03	Z-Vent Termination w/Damper 3 in
4	21.35	18	2SVSHTD04	Z-Vent Termination w/Damper 4 in

45° Termination Elbow

A	Part Number	Description
3	2SVSTEX0345	Z-Vent Termination Elbow 3 in X 45°
4	2SVSTEX0445	Z-Vent Termination Elbow 4 in X 45°

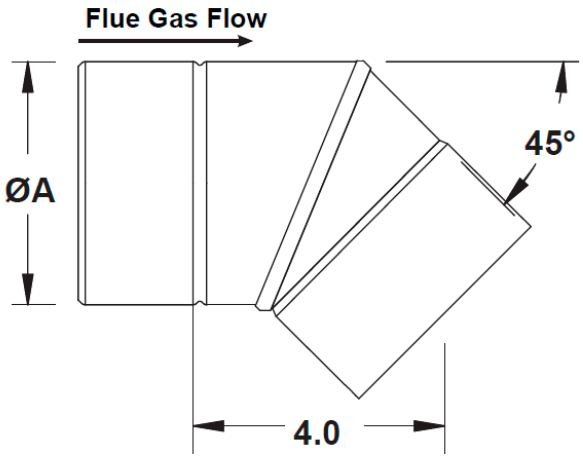

Z-VENT® Single Wall

90° Termination Elbow

A	Part Number	Description
3	2SVSTEX0390	Z-Vent Termination Elbow 3 in X 90°
4	2SVSTEX0490	Z-Vent Termination Elbow 4 in X 90°

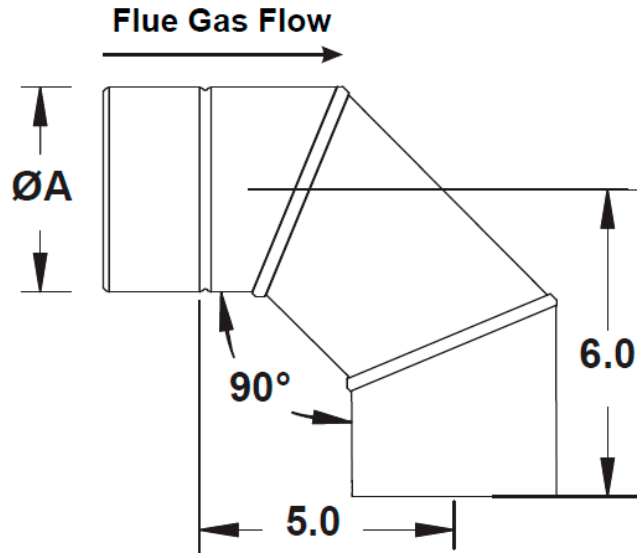

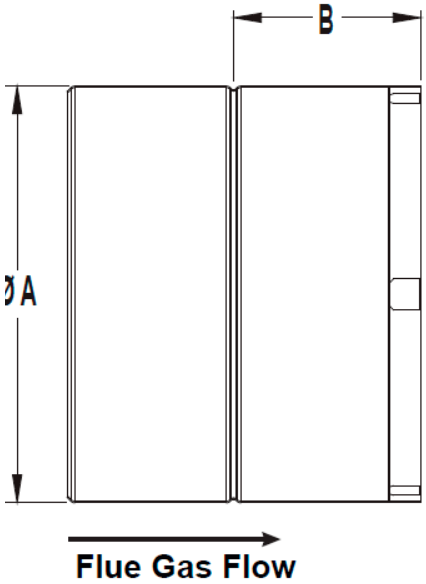

Termination Coupling

A	B	Part Number	Description
3	2	2SVSTP(F,X)03	Z-Vent Coupling Termination 3 in
4	2	2SVSTP(F,X)04	Z-Vent Coupling Termination 4 in
5	2	2SVSTPX05	Z-Vent Coupling Termination 5 in
6	2	2SVSTPX06	Z-Vent Coupling Termination 6 in
7	2	2SVSTPX07	Z-Vent Coupling Termination 7 in
8	2	2SVSTPX08	Z-Vent Coupling Termination 8 in
9	2	2SVSTPX09	Z-Vent Coupling Termination 9 in
10	2	2SVSTPX10	Z-Vent Coupling Termination 10 in
12	2	2SVSTPX12	Z-Vent Coupling Termination 12 in

45° Angle Termination

A	B	Part Number	Description
3	6.5	2SVSAT03	Z-Vent Angle Termination 3 in
4	7.0	2SVSAT04	Z-Vent Angle Termination 4 in
5	7.5	2SVSAT05	Z-Vent Angle Termination 5 in
6	8	2SVSAT06	Z-Vent Angle Termination 6 in
7	8.5	2SVSAT07	Z-Vent Angle Termination 7 in
8	9	2SVSAT08	Z-Vent Angle Termination 8 in
9	9.5	2SVSAT09	Z-Vent Angle Termination 9 in
10	10	2SVSAT10	Z-Vent Angle Termination 10 in
12	11	2SVSAT12	Z-Vent Angle Termination 12 in
14	12	2SVSAT14	Z-Vent Angle Termination 14 in

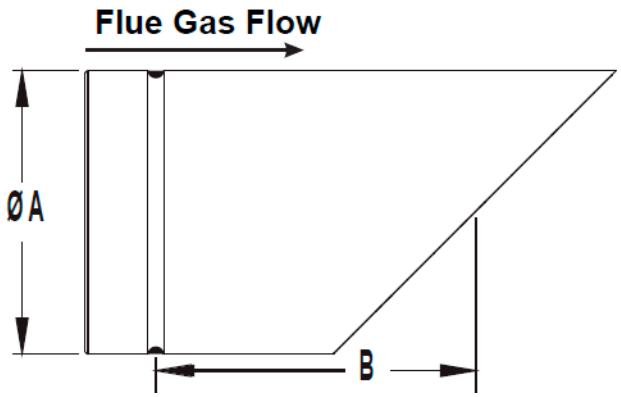

Roof Jack Support System

NOTICE The Roof Jack Support System, is available from 5" thru 24" and is recommended to be used on all through the roof vent terminations having multiple joints above the roof line with combustible or non-combustible roof structures.

➔ Prepare the breach location of the roof that will accept the Roof Jack Support System by drilling a small hole, marking the center of the vent termination. See below for Dimensions and Z-Vent Installation Guide for Roof Jack Support System maximum vent gas temperature, combustible clearance and minimum inside opening for framing.

Part	A	B	C	D	E (Square)	F	Usage			
							SW	DW	Concentric	I2
2SVSRJ05	5	10	12.5	6	20	6	5			
2SVSRJ06	6	11	13	7	21	6	6			
2SVSRJ07	7	12	14	8	21.5	6	7			
2SVSRJ08	8	13	14.5	9	23	6	8			
2SVSRJ09	9	13	14.5	10	23	6	9			
2SVSRJ10	10	14	15	11	23.5	6	10			
2SVSRJ12	12	16	16.5	13	25.5	6	12			
2SVSRJ14	14	18	19	15	27	6.8	14			
2SVSRJ16	16	20	21	17	28.5	6.8	16			
2SVSRJ18	18	22	23	19	30	6.8	18			
2SVSRJ20	20	24	24	21	31.5	6.8	20			
2SVSRJ22	22	26	25.5	23	33	6.8	22			
2SVSRJ24	24	28	27	25	37	6.8	24			
2SVDRJ05	5	9	11.5	8	19.5	6		5/7	4/7, 5/7	3/7
2SVDRJ06	6	10	12.5	9	20	6		6/8	5/8, 6/8	4/8
2SVDRJ07	7	11	13.5	10	21	6		7/9	6/9	5/9
2SVDRJ08	8	13	14	11	21.5	6		8/10	7/10	6/10
2SVDRJ09	9	13	14.5	12	22	6		9/11	8/11	7/11
2SVDRJ10	10	14	15	13	23	6		10/12	8/12	8/12
2SVDRJ12	12	16	16.5	15	24.5	6		12/14		10/14
2SVDRJ14	14	18	19.5	17	27	6.8		14/16		12/16
2SVDRJ16	16	20	21	19	28.5	6.8		16/18		14/18
2SVDRJ18	18	22	22.5	21	30	6.8		18/20		16/20
2SVDRJ20	20	24	23.5	23	31.5	6.8		20/22		18/22
2SVDRJ22	22	26	24.5	25	33	6.8		22/24		20/24
2SVDRJ24	24	28	26.5	27	36	6.8		24/26		22/26

SINGLE WALL

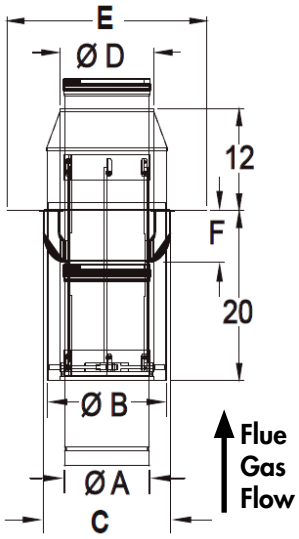

2SVSRJ

DOUBLE WALL

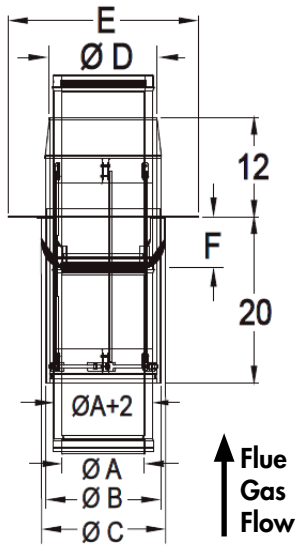

2SVDRJ

Z-VENT® Single Wall & Double Wall

Flashing Flat

						Usage			
A	C	Part Number	B	Part Number	B	SW	DW	Concentric	I2
3	16	2SVSSCS(F)03	4			3			
4	16	2SVSSCS(F)04	4			4		3/4	
3	12.5	2SVSF03	12	2SVSF03X	18	3			
4	14	2SVSF04	12	2SVSF04X	18	4		3/4	
5	16	2SVSF05	12	2SVSF05X	18	5	3/5	3/5	
6	17	2SVSF06	12	2SVSF06X	18	6	4/6	4/6	
7	18.5	2SVSF07	12	2SVSF07X	18	7	5/7	4/7, 5/7	3/7
8	22	2SVSF08	12	2SVSF08X	18	8	6/8	5/8, 6/8	4/8
9	22	2SVSF09	12	2SVSF09X	18	9	7/9	6/9	5/9
10	23	2SVSF10	12	2SVSF10X	18	10	8/10	7/10	6/10
11	24	2SVDF09	12	2SVDF09X	18		9/11	8/11	7/11
12	26	2SVSF12	12	2SVSF12X	18	12	10/12	8/12	8/12
14	28	2SVSF14	12	2SVSF14X	18	14	12/14		10/14
16	30	2SVSF16	12	2SVSF16X	18	16	14/16		12/16
18	32	2SVSF18	12	2SVSF18X	18	18	16/18		14/18
20	35	2SVSF20	12	2SVSF20X	18	20	18/20		16/20
22	37.5	2SVSF22	12	2SVSF22X	18	22	20/22		18/22
24	41	2SVSF24	12	2SVSF24X	18	24	22/24		20/24
26	42	2SVDF24	12	2SVDF24X	18		24/26		22/26

Flat flashing provides weather protection where the vent penetrates the roof or chimney. Use on flat or slightly sloped (5° slope maximum) roofs.

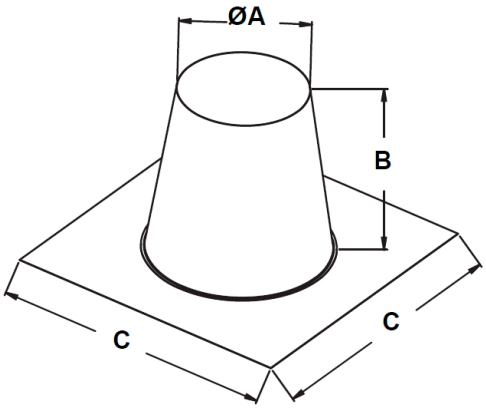

Flashing Adjustable

					Usage			
A	B	C	Part Number	Roof Pitch	SW	DW	Concentric	I2
3	6	16.00	2SVSADJS(F)03	30°-45°	3			
4	6	16.00	2SVSADJS(F)04	30°-45°	4		3/4	
3	6	16.00	2SVSADJ(F)03	0°-30°	3			
4	6	16.00	2SVSADJ(F)04	0°-30°	4		3/4	
5	6	16.00	2SVSFA05	0°-30°	5	3/5	3/5	
6	6	20.00	2SVSFA06	0°-30°	6	4/6	4/6	
7	6	24.00	2SVSFA07	0°-30°	7	5/7	4/7, 5/7	3/7
8	6	24.00	2SVSFA08	0°-30°	8	6/8	5/8, 6/8	4/8
9	6	25.00	2SVSFA09	0°-30°	9	7/9	6/9	5/9
10	6	26.00	2SVSFA10	0°-30°	10	8/10	7/10	6/10
11	6	26.00	2SVDFA09	0°-30°		9/11	8/11	7/11
12	6	26.00	2SVSFA12	0°-30°	12	10/12	8/12	8/12
14	6	27.38	2SVSFA14	0°-30°	14	12/14		10/14
16	6	30.00	2SVSFA16	0°-30°	16	14/16		12/16
18	6	32.00	2SVSFA18	0°-30°	18	16/18		14/18
20	6	35.00	2SVSFA20	0°-30°	20	18/20		16/20
22	6	37.50	2SVSFA22	0°-30°	22	20/22		18/22
24	6	39.00	2SVSFA24	0°-30°	24	22/24		20/24
26	6	40.75	2SVSFA26	0°-30°		24/26		22/26

0° - 30° flashing provides weather protection where the vent penetrates the roof. Use on roofs with a pitch from 0° - 30°- 0/12 - 5/12 slope.

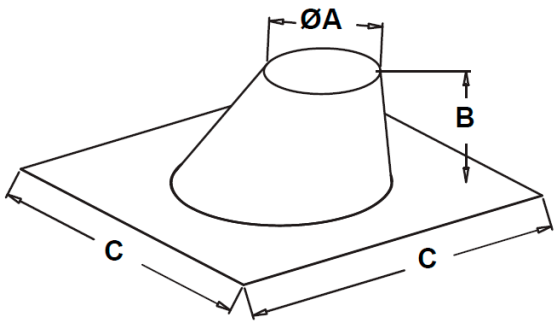

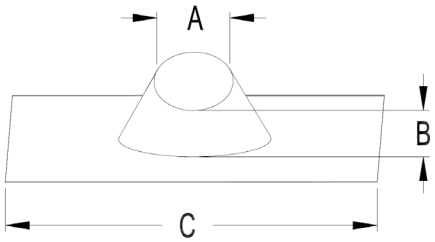

30°-45° flashing provides weather protection where the vent penetrates the roof. Use on roofs with a pitch from 30°-45° or 7/12 - 12/12 slope.

Z-VENT® Single Wall & Double Wall

Storm Collar (Top Support)

			Usage			
A	B	Part Number	SW	DW	Concentric	I2
3	7	2SVSLS(F,X)03	3			
4	8	2SVSLS(F,X)04	4		3/4	
5	9	2SVSLS05	5	3/5	3/5	
6	10	2SVSLS06	6	4/6	4/6	
7	11	2SVSLS07	7	5/7	4/7, 5/7	3/7
8	12	2SVSLS08	8	6/8	5/8, 6/8	4/8
9	13	2SVSLS09	9	7/9	6/9	5/9
10	14	2SVSLS10	10	8/10	7/10	6/10
11	15	2SVDLS09		9/11	8/11	7/11
12	16	2SVSLS12	12	10/12	8/12	8/12
14	18	2SVSLS14	14	12/14		10/14
16	20	2SVSLS16	16	14/16		12/16
18	22	2SVSLS18	18	16/18		14/18
20	24	2SVSLS20	20	18/20		16/20
22	26	2SVSLS22	22	20/22		18/22
24	28	2SVSLS24	24	22/24		20/24
26	30	2SVSLS26		24/26		22/26

For use in conjunction with flashing to prove weather protection. Apply field supplied sealant between vent pipe outside diameter and storm collar inside diameter.

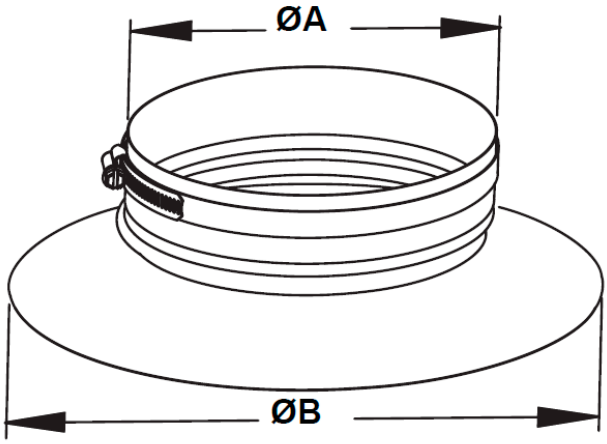

Guy Band

			Usage			
A	B	Part Number	SW	DW	Concentric	I2
3	3	2SVSGB03	3			
4	3	2SVSGB04	4		3/4	
5	3	2SVSGB05	5	3/5	3/5	
6	3	2SVSGB06	6	4/6	4/6	
7	3	2SVSGB07	7	5/7	4/7, 5/7	3/7
8	3	2SVSGB08	8	6/8	5/8, 6/8	4/8
9	3	2SVSGB09	9	7/9	6/9	5/9
10	3	2SVSGB10	10	8/10	7/10	6/10
11	3	2SVDGB09		9/11	8/11	7/11
12	3	2SVSGB12	12	10/12	8/12	8/12
14	3	2SVSGB14	14	12/14		10/14
16	3	2SVSGB16	16	14/16		12/16
18	3	2SVSGB18	18	16/18		14/18
20	3	2SVSGB20	20	18/20		16/20
22	3	2SVSGB22	22	20/22		18/22
24	3	2SVSGB24	24	22/24		20/24
26	3	2SVSGB26		24/26		22/26

A guy band is used to stabilize the vent above the roof line or where a vent support can not be used. Secure with 4 guy wires (not included).

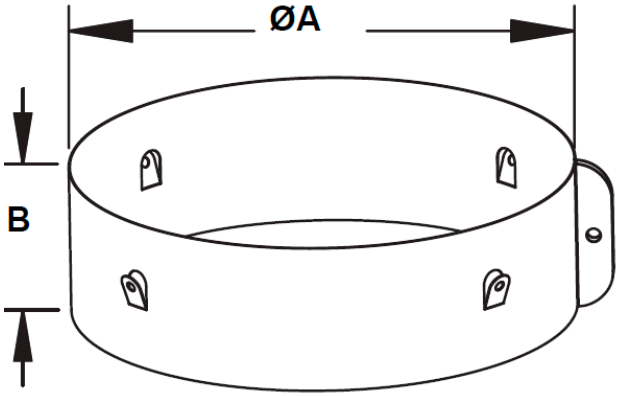

Z-VENT® Single Wall & Double Wall

Wall Thimble - Z-Vent Single & Double Wall Snap 4"-7" Thick Wall Thimble

					Usage		
A Intlet Dia.	A Outlet Dia.	B Thimble Dia.	C Sq. Plate	Part Number	SW	DW Snap	Concentric
3.63	3.13	5	8	2SVWT03	3		
4.63	4.13	6	9	2SVWT04	4		¾
5.63	5.13	7	10	2SVWT05	5	3/5	3/5
6.13	6.13	8	11	2SVWT064DW		4/6	4/6
7.13	7.13	9	12	2SVWT075DW		5/7	4/7, 5/7
6.13	6.13	12	15	2SVWT06	6		
7.13	7.13	13	16	2SVWT07	7		
8.13	8.13	14	17	2SVWT08	8	6/8	5/8, 6/8
9.13	9.13	15	18	2SVWT09	9	7/9	6/9
10.13	10.13	16	19	2SVWT10	10	8/10	7/10
11.13	11.13	17	20	2SVWT11		9/11	8/11
12.13	12.13	18	21	2SVWT12	12	10/12	8/12
14.13	14.13	20	23	2SVWT14	14	12/14	
13.13	16.13	22	25	2SVWT16	16	14/16	
18.13	18.13	24	27	2SVWT18	18	16/18	
20.13	20.13	26	29	2SVWT20	20	18/20	
22.13	22.13	28	31	2SVWT22	22	20/22	
24.13	24.13	30	33	2SVWT24	24	22/24	
26.13	26.13	32	35	2SVWT26		24/26	

For use when the vent passes through a horizontal opening. Not required for non-combustible walls.

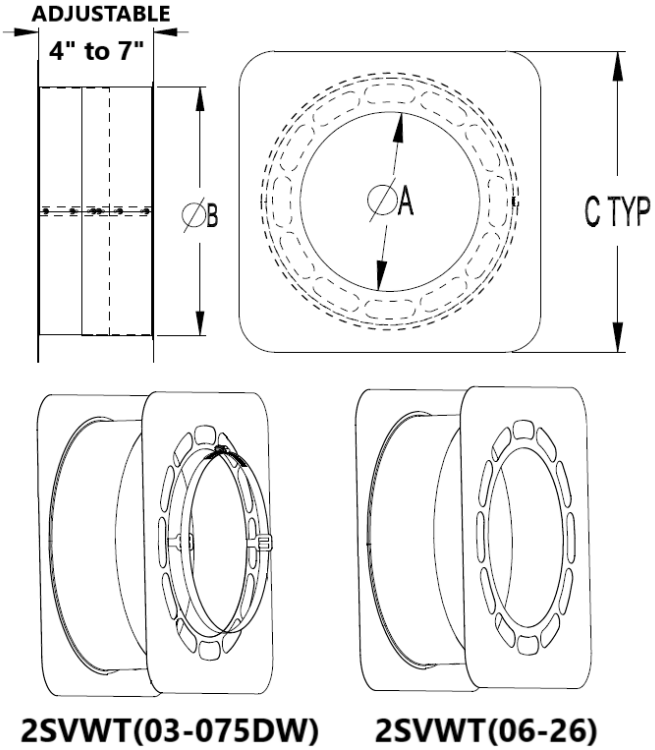

Wall Thimble - Z-Vent Single & Double Wall Snap 7"-13" Thick Wall Thimble

For use when the vent passes through a horizontal opening. Not required for non-combustible walls.

					Usage		
A Inlet Dia.	A Outlet Dia.	B Thimble Dia.	C Sq. Plate	Part Number	SW	DW Snap	Concentric
3.63	3.13	5	8	2SVWTM03	3		
4.63	4.13	6	9	2SVWTM04	4		¾
5.63	5.13	7	10	2SVWTM05	5	3/5	3/5
6.13	6.13	8	11	2SVWTM064DW		4/6	4/6
7.13	7.13	9	12	2SVWTM075DW		5/7	4/7, 5/7
6.13	6.13	12	15	2SVWTM06	6		
7.13	7.13	13	16	2SVWTM07	7		
8.13	8.13	14	17	2SVWTM08	8	6/8	5/8, 6/8
9.13	9.13	15	18	2SVWTM09	9	7/9	6/9
10.13	10.13	16	19	2SVWTM10	10	8/10	7/10
11.13	11.13	17	20	2SVWTM11		9/11	8/11
12.13	12.13	18	21	2SVWTM12	12	10/12	8/12
14.13	14.13	20	23	2SVWTM14	14	12/14	
16.13	16.13	22	25	2SVWTM16	16	14/16	
18.13	18.13	24	27	2SVWTM18	18	16/18	
20.13	20.13	26	29	2SVWTM20	20	18/20	
22.13	22.13	28	31	2SVWTM22	22	20/22	
24.13	24.13	30	33	2SVWTM24	24	22/24	
26.13	26.13	32	35	2SVWTM26		24/26	

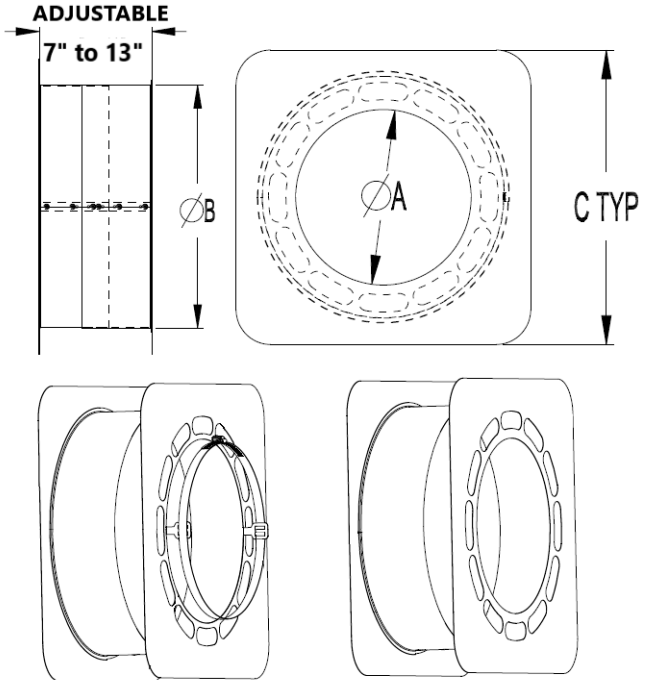

2SVWTM(03-075DW) 2SVWTM(06-26)

Z-VENT® Single Wall & Double Wall

Firestop

				Usage			
A	B	C	Part Number	SW	DW	Concentric	I2
3.1	4	16	2ZVFS03	3			
4.1	4	17	2ZVFS04	4		3/4	
5.1	4	18	2ZVFS05	5	3/5	3/5	
6.1	4	19	2ZVFS064DW		4/6	4/6	
7.1	4	20	2ZVFS075DW		5/7	4/7, 5/7	3/7
6.1	6	23	2ZVFS06	6			
7.1	6	24	2ZVFS07	7			
8.1	6	25	2ZVFS08	8	6/8	5/8, 6/8	4/8
9.1	6	26	2ZVFS09	9	7/9	6/9	5/9
10.1	6	27	2ZVFS10	10	8/10	7/10	6/10
11.1	6	28	2ZVFS11		9/11	8/11	7/11
12.1	6	29	2ZVFS12	12	10/12	8/12	8/12
14.1	6	31	2ZVFS14	14	12/14		10/14
16.1	6	33	2ZVFS16	16	14/16		12/16
18.1	6	35	2ZVFS18	18	16/18		14/18
20.1	6	37	2ZVFS20	20	18/20		16/20
22.1	6	39	2ZVFS22	22	20/22		18/22
24.1	6	41	2ZVFS24	24	22/24		20/24
26.1	6	43	2ZVFS26		24/26		22/26

A firestop is used on vertical systems to provide firestop or firestop/support and maintain the necessary clearance to combustible materials. (For sizes 6" and up gear clamp comes loose with no gear clamp bracket.)

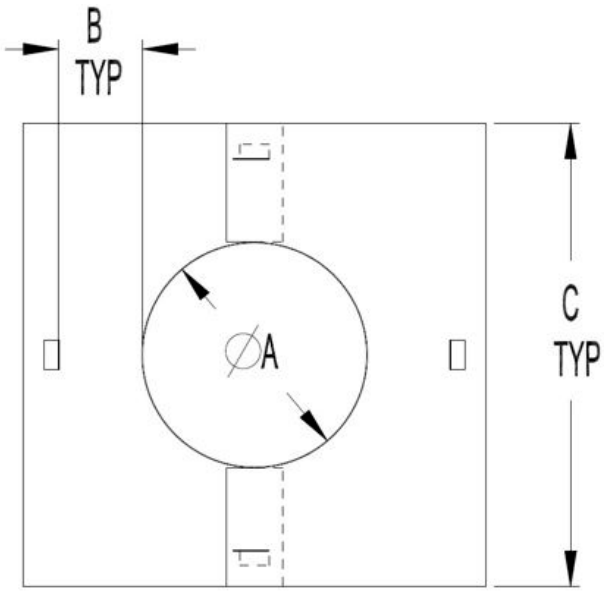

Firestop Support

				Usage			
A	B	C	Part Number	SW	DW	Concentric	I2
3.1	4	16	2ZVFSS03	3			
4.1	4	17	2ZVFSS04	4		3/4	
5.1	4	18	2ZVFSS05	5	3/5	3/5	
6.1	4	19	2ZVFSS064DW		4/6	4/6	
7.1	4	20	2ZVFSS075DW		5/7	4/7, 5/7	3/7
6.1	6	23	2ZVFSS06	6			
7.1	6	24	2ZVFSS07	7			
8.1	6	25	2ZVFSS08	8	6/8	5/8, 6/8	4/8
9.1	6	26	2ZVFSS09	9	7/9	6/9	5/9
10.1	6	27	2ZVFSS10	10	8/10	7/10	6/10
11.1	6	28	2ZVFSS11		9/11	8/11	7/11
12.1	6	29	2ZVFSS12	12	10/12	8/12	8/12
14.1	6	31	2ZVFSS14	14	12/14		10/14
16.1	6	33	2ZVFSS16	16	14/16		12/16
18.1	6	35	2ZVFSS18	18	16/18		14/18
20.1	6	37	2ZVFSS20	20	18/20		16/20
22.1	6	39	2ZVFSS22	22	20/22		18/22
24.1	6	41	2ZVFSS24	24	22/24		20/24
26.1	6	43	2ZVFSS26		24/26		22/26

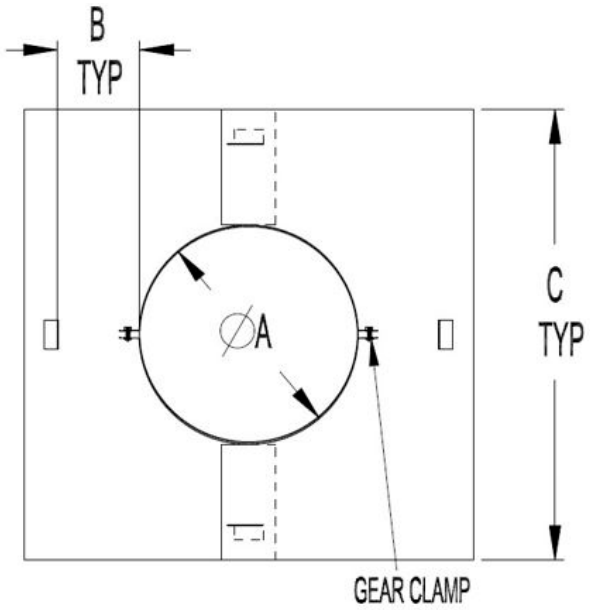

Z-VENT® Single Wall & Double Wall

Wall (Vent) Support

				Usage			
A	B	C	Part Number	SW	DW	Concentric	I2
3	2.5	3	2SVSWS03	3			
4	3	3	2SVSWS04	4		3/4	
5	4.5	3	2SVSWS05	5	3/5	3/5	
6	5	3	2SVSWS06	6	4/6	4/6	
7	5.5	3	2SVSWS07	7	5/7	4/7, 5/7	3/7
8	6	3	2SVSWS08	8	6/8	5/8, 6/8	4/8
9	6.5	3	2SVSWS09	9	7/9	6/9	5/9
10	7	3	2SVSWS10	10	8/10	7/10	6/10
11	7.7	3	2SVDWS09		9/11	8/11	7/11
12	8	3	2SVSWS12	12	10/12	8/12	8/12
14	9	3	2SVSWS14	14	12/14		10/14
16	10	3	2SVSWS16	16	14/16		12/16
18	11	3	2SVSWS18	18	16/18		14/18
20	12	3	2SVSWS20	20	18/20		16/20
22	13	3	2SVSWS22	22	20/22		18/22
24	14	3	2SVSWS24	24	22/24		20/24
26	15	3	2SVSWS26		24/26		22/26

Z-Vent wall (vent) support is used to provide support to the vent system while maintaining proper clearance to combustible materials. As vertical supports are required after any 10ft run. These supports may also be used to support long horizontal runs, which require support every 6ft. Can be used on horizontal and vertical runs.

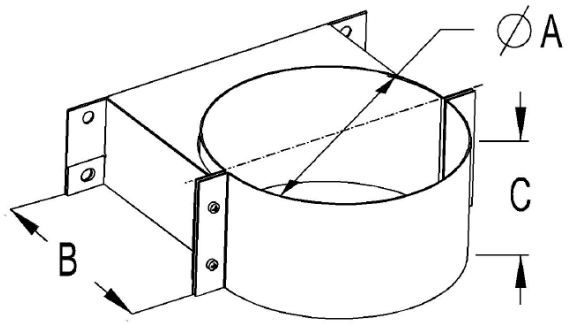

Floor Base Support

			Usage			
A	B	Part Number	SW	DW	Concentric	I2
4	5.875	2SVSFBS05	5	3/5	3/5	
5	6.875	2SVSFBS06	6	4/6	4/6	
6	7.875	2SVSFBS07	7	5/7	4/7, 5/7	3/7
7	8.875	2SVSFBS08	8	6/8	5/8, 6/8	4/8
8	9.875	2SVSFBS09	9	7/9	6/9	5/9
9	10.875	2SVSFBS10	10	8/10	7/10	6/10
10	11.875	2SVSFBS11		9/11	8/11	7/11
11	12.875	2SVSFBS12	12	10/12	8/12	8/12
13	14.875	2SVSFBS14	14	12/14		10/14
15	16.875	2SVSFBS16	16	14/16		12/16
17	18.875	2SVSFBS18	18	16/18		14/18
19	20.875	2SVSFBS20	20	18/20		16/20
21	22.875	2SVSFBS22	22	20/22		18/22
23	24.875	2SVSFBS24	24	22/24		20/24
25	26.875	2SVSFBS26		24/26		22/26

MAXIMUM height is 16 inches (installer can extend on-site if needed). MINIMUM 6 inches (allowance for P-Trap tube)

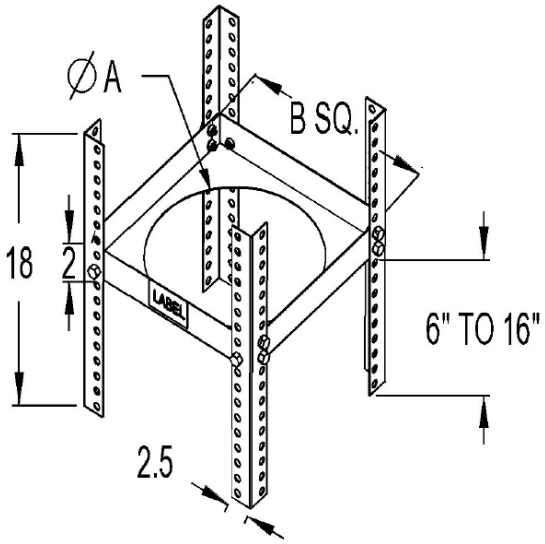

Z-VENT® Single Wall & Double Wall

Base (Wall) Support

			Usage			
A	B	Part Number	SW	DW	Concentric	I2
5	10	2SVSBS05	5	3/5	3/5	
6	11	2SVSBS06	6	4/6	4/6	
7	12	2SVSBS07	7	5/7	4/7, 5/7	3/7
8	13	2SVSBS08	8	6/8	5/8, 6/8	4/8
9	14	2SVSBS09	9	7/9	6/9	5/9
10	15	2SVSBS10	10	8/10	7/10	6/10
11	16	2SVDBS09		9/11	8/11	7/11
12	17	2SVSBS12	12	10/12	8/12	8/12
14	19	2SVSBS14	14	12/14		10/14
16	21	2SVSBS16	16	14/16		12/16
18	23	2SVSBS18	18	16/18		14/18
20	25	2SVSBS20	20	18/20		16/20
22	27	2SVSBS22	22	20/22		18/22
24	29	2SVSBS24	24	22/24		20/24
26	31	2SVSBS26		24/26		22/26

Base supports are designed to support the vent base and maintain proper clearance to combustibles.

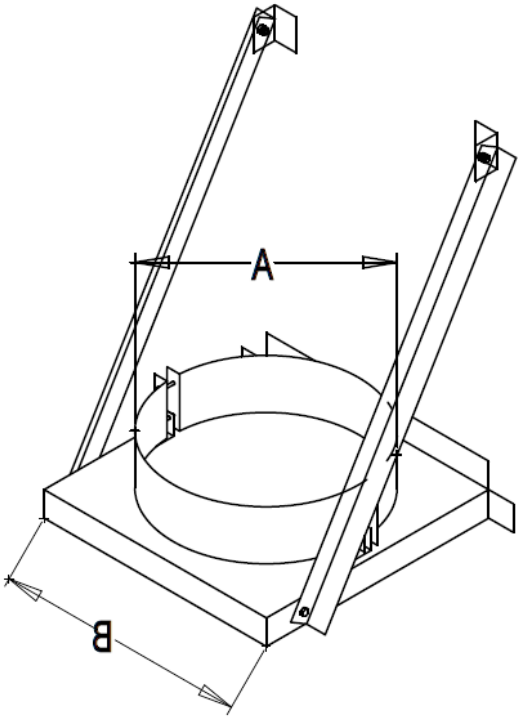

Clamp Band Support

			Usage			
A	B	Part Number	SW	DW	Concentric	I2
5	8	2SVSCB05	5	3/5	3/5	
6	9	2SVSCB06	6	4/6	4/6	
7	10	2SVSCB07	7	5/7	4/7, 5/7	3/7
8	11	2SVSCB08	8	6/8	5/8, 6/8	4/8
9	12.1	2SVSCB09	9	7/9	6/9	5/9
10	13	2SVSCB10	10	8/10	7/10	6/10
11	14	2SVDCB09		9/11	8/11	7/11
12	14.6	2SVSCB12	12	10/12	8/12	8/12
14	17	2SVSCB14	14	12/14		10/14
16	19.5	2SVSCB16	16	14/16		12/16
18	21	2SVSCB18	18	16/18		14/18
20	23	2SVSCB20	20	18/20		16/20
22	25.2	2SVSCB22	22	20/22		18/22
24	27	2SVSCB24	24	22/24		20/24
26	29	2SVDCB24		24/26		22/26

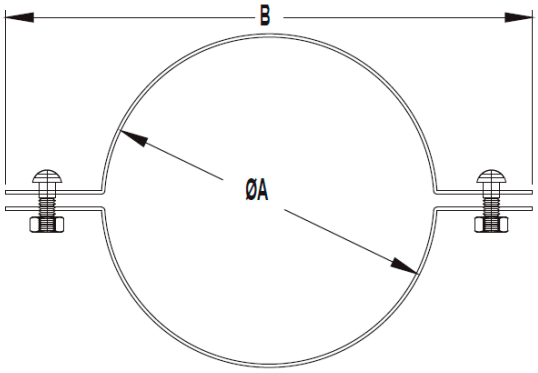

Z-VENT® Single Wall & Double Wall

Vertical Rise Support

			Usage			
A	**B**	**Part Number**	**SW**	**DW**	**Concentric**	**I2**
5	9	2SVSVRS05V	5	3/5	3/5	
6	10	2SVSVRS06V	6	4/6	4/6	
7	11	2SVSVRS07V	7	5/7	4/7, 5/7	3/7
8	12	2SVSVRS08V	8	6/8	5/8, 6/8	4/8
9	13	2SVSVRS09V	9	7/9	6/9	5/9
10	14	2SVSVRS10V	10	8/10	7/10	6/10
11	15	2SVSVRS11V		9/11	8/11	7/11
12	16	2SVSVRS12V	12	10/12	8/12	8/12
14	18	2SVSVRS14V	14	12/14		10/14
16	20	2SVSVRS16V	16	14/16		12/16
18	22	2SVSVRS18V	18	16/18		14/18
20	24	2SVSVRS20V	20	18/20		16/20
22	26	2SVSVRS22V	22	20/22		18/22
24	28	2SVSVRS24V	24	22/24		20/24
26	30	2SVSVRS26V		24/26		22/26

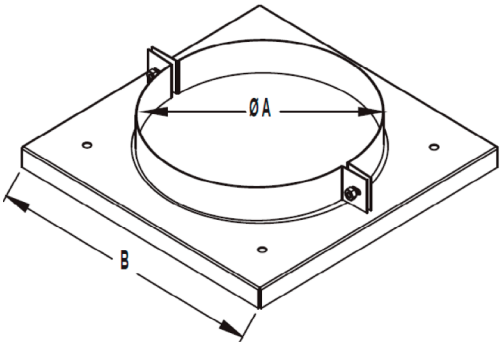

Condensate Tube Kit

Part Number	Description
2SVEDTK	Condensate Tube Kit 18 IN Long
2SVEDTK24	Condensate Tube Kit 24 IN Long
2SVEDTK36	Condensate Tube Kit 36 IN Long
2SVEDTKX	Condensate Tube Kit 60 IN Long

Kit includes:
½" hose clamp, 2 cable ties and length of
⅜" I.D. x ⅝" O.D. silicon tube

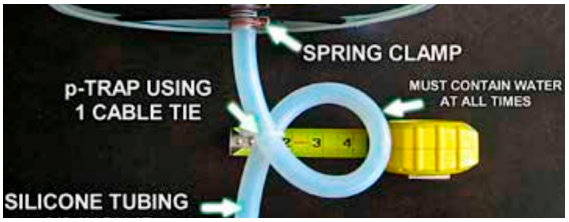

Part No. 2LUBE

See: **Z-Vent Joint Lubrication Instructions**

Z-VENT® Transition Adapters

SW to DW Snap Adapter

A	B	Part Number	Description
3	5.75	2SVDSA03	Z-Vent SW to DW Snap Adapter 3
4	5.75	2SVDSA04	Z-Vent SW to DW Snap Adapter 4
5	5.75	2SVDSA05	Z-Vent SW to DW Snap Adapter 5
6	5.75	2SVDSA06	Z-Vent SW to DW Snap Adapter 6
7	5.75	2SVDSA07	Z-Vent SW to DW Snap Adapter 7
8	5.75	2SVDSA08	Z-Vent SW to DW Snap Adapter 8
9	5.75	2SVDSA09	Z-Vent SW to DW Snap Adapter 9
10	5.75	2SVDSA10	Z-Vent SW to DW Snap Adapter 10
12	5.75	2SVDSA12	Z-Vent SW to DW Snap Adapter 12
14	5.75	2SVDSA14	Z-Vent SW to DW Snap Adapter 14
16	5.75	2SVDSA16	Z-Vent SW to DW Snap Adapter 16
18	5.75	2SVDSA18	Z-Vent SW to DW Snap Adapter 18
20	5.75	2SVDSA20	Z-Vent SW to DW Snap Adapter 20
22	5.75	2SVDSA22	Z-Vent SW to DW Snap Adapter 22
24	5.75	2SVDSA24	Z-Vent SW to DW Snap Adapter 24

Used to adapt Z-Vent single wall to double wall pipe or flue outlet collar.

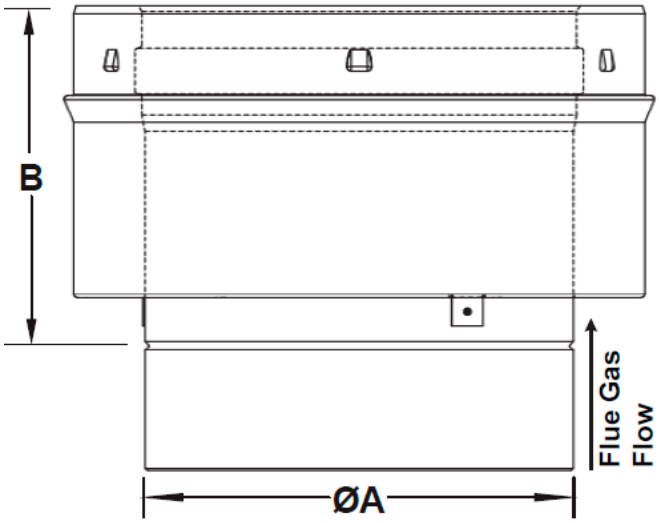

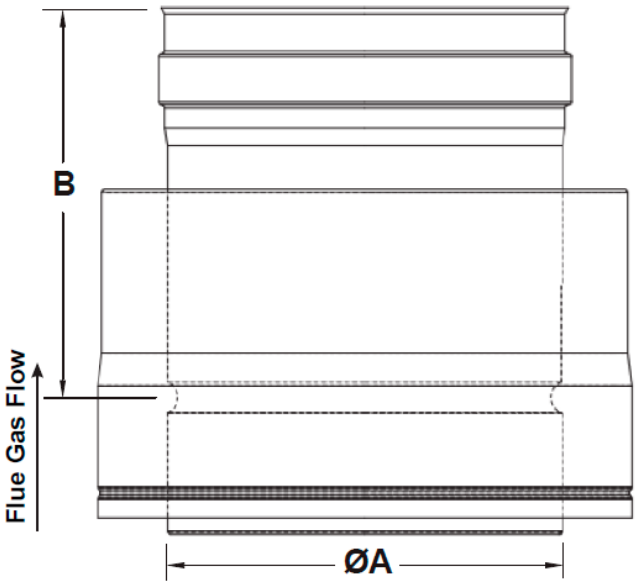

DW Snap to SW Adapter

A	B	Part Number	Description
3	5.75	2SVSDA03	Z-Vent DW Snap to SW Adapter 3
4	5.75	2SVSDA04	Z-Vent DW Snap to SW Adapter 4
5	5.75	2SVSDA05	Z-Vent DW Snap to SW Adapter 5
6	5.75	2SVSDA06	Z-Vent DW Snap to SW Adapter 6
7	5.75	2SVSDA07	Z-Vent DW Snap to SW Adapter 7
8	5.75	2SVSDA08	Z-Vent DW Snap to SW Adapter 8
9	5.75	2SVSDA09	Z-Vent DW Snap to SW Adapter 9
10	5.75	2SVSDA10	Z-Vent DW Snap to SW Adapter 10
12	5.75	2SVSDA12	Z-Vent DW Snap to SW Adapter 12
14	5.75	2SVSDA14	Z-Vent DW Snap to SW Adapter 14
16	5.75	2SVSDA16	Z-Vent DW Snap to SW Adapter 16
18	5.75	2SVSDA18	Z-Vent DW Snap to SW Adapter 18
20	5.75	2SVSDA20	Z-Vent DW Snap to SW Adapter 20
22	5.75	2SVSDA22	Z-Vent DW Snap to SW Adapter 22
24	5.75	2SVSDA24	Z-Vent DW Snap to SW Adapter 24

SW to ZV Clamp DW Adapter

A	B	Part Number	Description
6	6	2SVDSA06V	ZV SW to ZVC DW Adapter 6
7	6	2SVDSA07V	ZV SW to ZVC DW Adapter 7
8	6	2SVDSA08V	ZV SW to ZVC DW Adapter 8
9	6	2SVDSA09V	ZV SW to ZVC DW Adapter 9
10	6	2SVDSA10V	ZV SW to ZVC DW Adapter 10
12	6	2SVDSA12V	ZV SW to ZVC DW Adapter 12
14	6	2SVDSA14V	ZV SW to ZVC DW Adapter 14
16	6	2SVDSA16V	ZV SW to ZVC DW Adapter 16
18	6	2SVDSA18V	ZV SW to ZVC DW Adapter 18
20	6	2SVDSA20V	ZV SW to ZVC DW Adapter 20
22	6	2SVDSA22V	ZV SW to ZVC DW Adapter 22
24	6	2SVDSA24V	ZV SW to ZVC DW Adapter 24

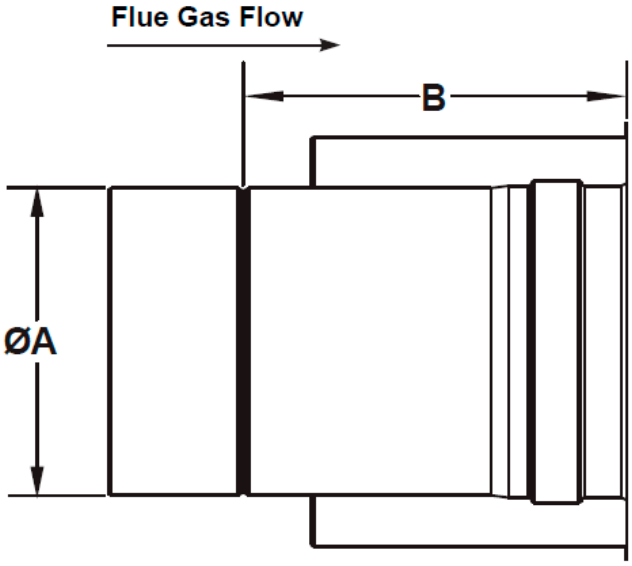

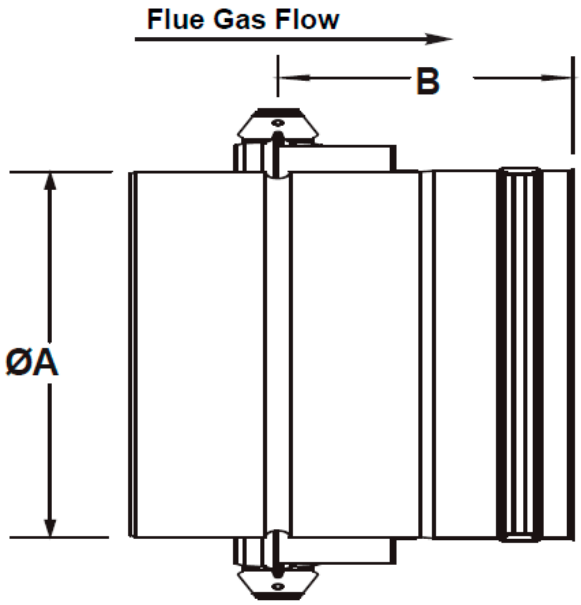

ZV Clamp DW to SW Adapter

A	B	Part Number	Description
6	6	2SVSDA06V	ZVC DW to ZV SW Adapter 6
7	6	2SVSDA07V	ZVC DW to ZV SW Adapter 7
8	6	2SVSDA08V	ZVC DW to ZV SW Adapter 8
9	6	2SVSDA09V	ZVC DW to ZV SW Adapter 9
10	6	2SVSDA10V	ZVC DW to ZV SW Adapter 10
12	6	2SVSDA12V	ZVC DW to ZV SW Adapter 12
14	6	2SVSDA14V	ZVC DW to ZV SW Adapter 14
16	6	2SVSDA16V	ZVC DW to ZV SW Adapter 16
18	6	2SVSDA18V	ZVC DW to ZV SW Adapter 18
20	6	2SVSDA20V	ZVC DW to ZV SW Adapter 20
22	6	2SVSDA22V	ZVC DW to ZV SW Adapter 22
24	6	2SVSDA24V	ZVC DW to ZV SW Adapter 24

Z-VENT® Double Wall with Snap Lock

Double Wall Concentric Increaser

A	B	C	Part Number	Description
3	4	7.00	2SVDI0304	Z-Vent DW. Increaser 3 to 4 in
3	5	8.15	2SVDI0305	Z-Vent DW. Increaser 3 to 5 in
3	6		2SVDI0306	Z-Vent DW. Increaser 3 to 6 in
4	5	7.00	2SVDI0405	Z-Vent DW. Increaser 4 to 5 in
4	6	8.15	2SVDI0406	Z-Vent DW. Increaser 4 to 6 in
4	8	10.30	2SVDI0408	Z-Vent DW. Increaser 4 to 8 in
5	6	7.00	2SVDI0506	Z-Vent DW. Increaser 5 to 6 in
5	7	8.15	2SVDI0507	Z-Vent DW. Increaser 5 to 7 in
5	8	9.20	2SVDI0508	Z-Vent DW. Increaser 5 to 8 in
6	7	7.00	2SVDI0607	Z-Vent DW. Increaser 6 to 7 in
6	8	8.15	2SVDI0608	Z-Vent DW. Increaser 6 to 8 in
6	9	9.20	2SVDI0609	Z-Vent DW. Increaser 6 to 9 in
6	10	10.30	2SVDI0610	Z-Vent DW. Increaser 6 to 10 in
6	12	11.50	2SVDI0612	Z-Vent DW. Increaser 6 to 12 in
7	8	7.00	2SVDI0708	Z-Vent DW. Increaser 7 to 8 in
7	10	9.20	2SVDI0710	Z-Vent DW. Increaser 7 to 10 in
7	12	11.36	2SVDI0712	Z-Vent DW. Increaser 7 to 12 in
8	10	8.15	2SVDI0810	Z-Vent DW. Increaser 8 to 10 in
8	12	10.30	2SVDI0812	Z-Vent DW. Increaser 8 to 12 in
8	14	12.43	2SVDI0814	Z-Vent DW. Increaser 8 to 14 in
9	10	7.00	2SVDI0910	Z-Vent DW. Increaser 9 to 10 in
9	12	9.20	2SVDI0912	Z-Vent DW. Increaser 9 to 12 in
10	12	8.15	2SVDI1012	Z-Vent DW. Increaser 10 to 12 in
10	14	11.30	2SVDI1014	Z-Vent DW. Increaser 10 to 14 in
10	16	13.43	2SVDI1016	Z-Vent DW. Increaser 10 to 16 in
12	14	9.15	2SVDI1214	Z-Vent DW. Increaser 12 to 14 in
12	16	11.30	2SVDI1216	Z-Vent DW. Increaser 12 to 16 in
12	18	13.43	2SVDI1218	Z-Vent DW. Increaser 12 to 18 in
12	20	14.75	2SVDI1220	Z-Vent DW. Increaser 12 to 20 in
14	16	9.15	2SVDI1416	Z-Vent DW. Increaser 14 to 16 in
14	18	11.30	2SVDI1418	Z-Vent DW. Increaser 14 to 18 in
14	20	13.43	2SVDI1420	Z-Vent DW. Increaser 14 to 20 in
16	18	9.15	2SVDI1618	Z-Vent DW. Increaser 16 to 18 in
16	20	11.30	2SVDI1620	Z-Vent DW. Increaser 16 to 20 in
16	22	13.43	2SVDI1622	Z-Vent DW. Increaser 16 to 22 in
18	20	9.15	2SVDI1820	Z-Vent DW. Increaser 18 to 20 in
18	22	11.30	2SVDI1822	Z-Vent DW. Increaser 18 to 22 in
20	22	9.15	2SVDI2022	Z-Vent DW. Increaser 20 to 22 in
20	24	11.30	2SVDI2024	Z-Vent DW. Increaser 20 to 24 in
22	24	9.15	2SVDI2224	Z-Vent DW. Increaser 22 to 24 in

Used to upsize a vent system. Recommended only for use with vertical vent runs to ensure proper condensate drainage.

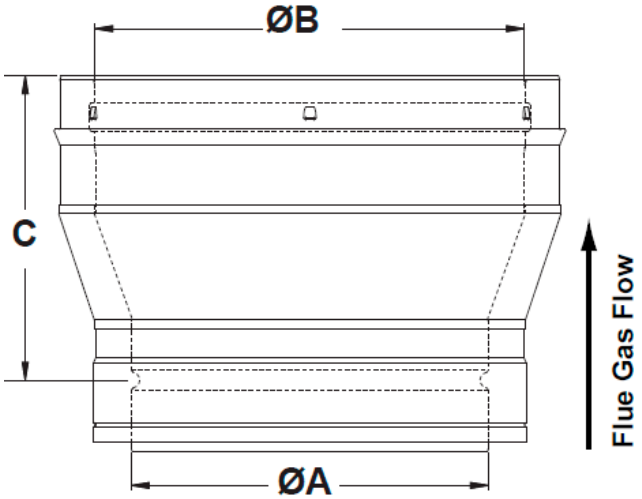

Double Wall Eccentric Increaser

A	B	C	D	Part Number	Description
3	4	10.40	0.50	2SVDIE0304	Z-Vent DW Eccentric Increaser 3 to 4 in
3	5		1.00	2SVDIE0305	Z-Vent DW Eccentric Increaser 3 to 5 in
3	6		1.50	2SVDIE0306	Z-Vent DW Eccentric Increaser 3 to 6 in
4	5		0.50	2SVDIE0405	Z-Vent DW Eccentric Increaser 4 to 5 in
4	6	11.75	1.00	2SVDIE0406	Z-Vent DW Eccentric Increaser 4 to 6 in
4	8	11.75	2.00	2SVDIE0408	Z-Vent DW Eccentric Increaser 4 to 8 in
5	6	12.00	0.50	2SVDIE0506	Z-Vent DW Eccentric Increaser 5 to 6 in
5	7	12.00	1.00	2SVDIE0507	Z-Vent DW Eccentric Increaser 5 to 7 in
5	8	11.75	1.50	2SVDIE0508	Z-Vent DW Eccentric Increaser 5 to 8 in
6	7	12.00	0.50	2SVDIE0607	Z-Vent DW Eccentric Increaser 6 to 7 in
6	8	12.00	1.00	2SVDIE0608	Z-Vent DW Eccentric Increaser 6 to 8 in
6	9	14.00	1.50	2SVDIE0609	Z-Vent DW Eccentric Increaser 6 to 9 in
6	10	14.00	2.00	2SVDIE0610	Z-Vent DW Eccentric Increaser 6 to 10 in
6	12	14.00	3.00	2SVDIE0612	Z-Vent DW Eccentric Increaser 6 to 12 in
7	8	12.00	0.50	2SVDIE0708	Z-Vent DW Eccentric Increaser 7 to 8 in
7	10	12.00	1.50	2SVDIE0710	Z-Vent DW Eccentric Increaser 7 to 10 in
7	12	14.00	2.50	2SVDIE0712	Z-Vent DW Eccentric Increaser 7 to 12 in
8	10	12.00	1.00	2SVDIE0810	Z-Vent DW Eccentric Increaser 8 to 10 in
8	12	12.00	2.00	2SVDIE0812	Z-Vent DW Eccentric Increaser 8 to 12 in
8	14	14.00	3.00	2SVDIE0814	Z-Vent DW Eccentric Increaser 8 to 14 in
9	10	12.00	0.50	2SVDIE0910	Z-Vent DW Eccentric Increaser 9 to 10 in
9	12	12.00	1.50	2SVDIE0912	Z-Vent DW Eccentric Increaser 9 to 12 in
10	12	12.00	1.00	2SVDIE1012	Z-Vent DW Eccentric Increaser 10 to 12 in
10	14	13.00	2.00	2SVDIE1014	Z-Vent DW Eccentric Increaser 10 to 14 in
10	16	14.00	3.00	2SVDIE1016	Z-Vent DW Eccentric Increaser 10 to 16 in
12	14	15.00	1.00	2SVDIE1214	Z-Vent DW Eccentric Increaser 12 to 14 in
12	16	15.00	2.00	2SVDIE1216	Z-Vent DW Eccentric Increaser 12 to 16 in
12	18	15.00	3.00	2SVDIE1218	Z-Vent DW Eccentric Increaser 12 to 18 in
12	20		4.00	2SVDIE1220	Z-Vent DW Eccentric Increaser 12 to 20 in
14	16	15.00	1.00	2SVDIE1416	Z-Vent DW Eccentric Increaser 14 to 16 in
14	18	15.00	2.00	2SVDIE1418	Z-Vent DW Eccentric Increaser 14 to 18 in
14	20	15.00	3.00	2SVDIE1420	Z-Vent DW Eccentric Increaser 14 to 20 in
16	18	15.00	1.00	2SVDIE1618	Z-Vent DW Eccentric Increaser 16 to 18 in
16	20	15.00	2.00	2SVDIE1620	Z-Vent DW Eccentric Increaser 16 to 20 in
16	22	15.00	3.00	2SVDIE1622	Z-Vent DW Eccentric Increaser 16 to 22 in
18	20	15.00	1.00	2SVDIE1820	Z-Vent DW Eccentric Increaser 18 to 20 in
18	22	15.00	2.00	2SVDIE1822	Z-Vent DW Eccentric Increaser 18 to 22 in
20	22		1.00	2SVDIE2022	Z-Vent DW Eccentric Increaser 20 to 22 in
20	24		2.00	2SVDIE2024	Z-Vent DW Eccentric Increaser 20 to 24 in
22	24		1.00	2SVDIE2224	Z-Vent DW Eccentric Increaser 22 to 24 in

Used to upsize a vent system.

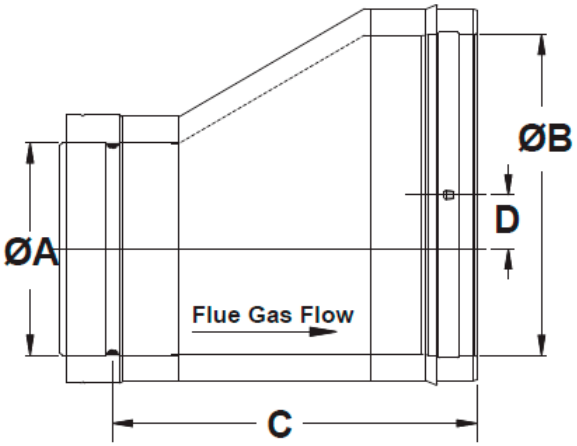

Z-VENT® Double Wall with Snap Lock

Double Wall Concentric Reducer

A	B	C	Part Number	Description
4	3	8.5	2SVDR0403	Z-Vent DW Reducer 4 in to 3 in
5	4	11	2SVDR0504	Z-Vent DW Reducer 5 in to 4 in
6	4	8	2SVDR0604	Z-Vent DW Reducer 6 in to 4 in
8	6	9.2	2SVDR0806	Z-Vent DW Reducer 8 in to 6 in
9	8	11	2SVDR0908	Z-Vent DW Reducer 9 in to 8 in
10	8	11	2SVDR1008	Z-Vent DW Reducer 10 in to 8 in
10	9	11	2SVDR1009	Z-Vent DW Reducer 10 in to 9 in
12	8	11	2SVDR1208	Z-Vent DW Reducer 12 in to 8 in
12	10	9.75	2SVDR1210	Z-Vent DW Reducer 12 in to 10 in
14	12	11	2SVDR1412	Z-Vent DW Reducer 14 in to 12 in

Used to downsize a vent system.

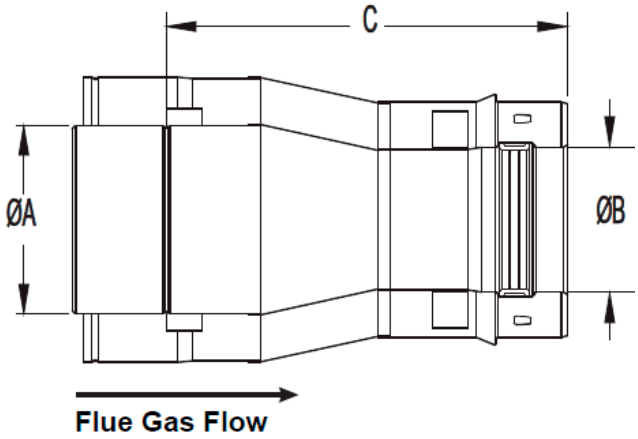

Used to downsize a vent system.

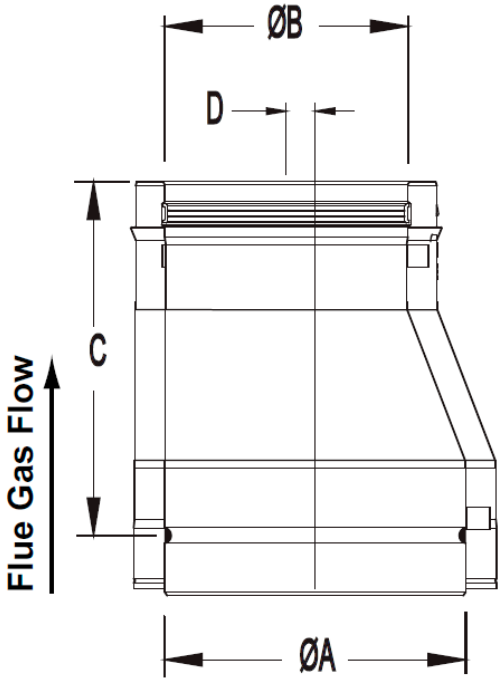

Double Wall Eccentric Reducer

A	B	C	Part Number	Description
8	6	10	2SVDRE0806	Z-Vent DW Eccentric Reducer 8in - 6in
10	8	11.75	2SVDRE1008	Z-Vent DW Eccentric Reducer 10in - 8in
18	16	14.85	2SVDRE1816	Z-Vent DW Eccentric Reducer 18in - 16in

Double Wall Lateral Wye

A	B	C	D	Part Number	Description
6	11.2	4.5	11.28	2SVDL0645	Z-Vent DW Lateral 6 x 45° Wye
8	14.2	5.03	14.55	2SVDL0845	Z-Vent DW Lateral 8 x 45° Wye
10	17.8	5.45	18.11	2SVDL1045	Z-Vent DW Lateral 10 x 45° Wye
12	21.4	5.75	21.45	2SVDL1245	Z-Vent DW Lateral 12 x 45° Wye
14	23.9	7.81	24	2SVDL1445	Z-Vent DW Lateral 14 x 45° Wye
16	27.7	7.56	28	2SVDL1645	Z-Vent DW Lateral 16 x 45° Wye
20	34.3	8.38	34	2SVDL2045	Z-Vent DW Lateral 20 x 45° Wye

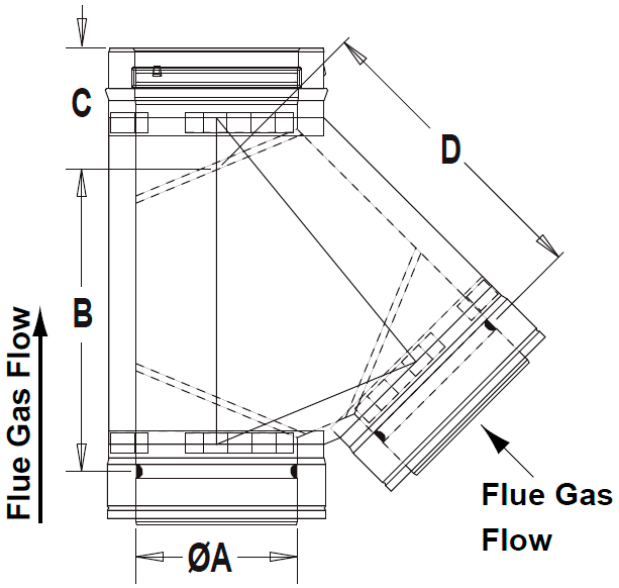

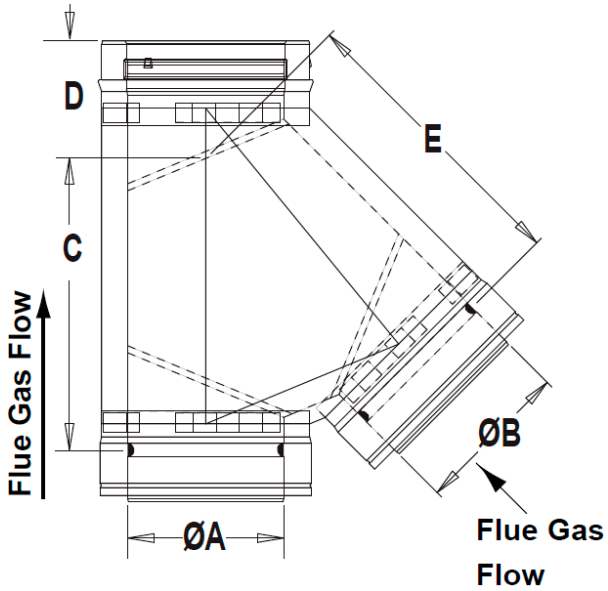

Double Wall Lateral Wye Reducing Branch

A	B	C	D	E	Part Number	Description
8	6	10.68	4.65	11.5	2SVDL080645	Z-Vent DW Lateral 8x45° Wye 6 Branch
12	6	9.86	5.48	12.34	2SVDL120645	Z-Vent DW Lateral 12x45° Wye 6 Branch
12	7	11.75	5.75	13.9	2SVDL120745	Z-Vent DW Lateral 12x45° Wye 7 Branch
14	6	12.35	7.06	16	2SVDL140645	Z-Vent DW Lateral 14x45° Wye 6 Branch
14	8	13.27	7.15	15.8	2SVDL140845	Z-Vent DW Lateral 14x45° Wye 8 Branch
16	10	17.34	7.31	19.55	2SVDL161045	Z-Vent DW Lateral 16x45° Wye 10 Branch
18	10	20.32	8	20.85	2SVDL181045	Z-Vent DW Lateral 18x45° Wye 10 Branch
20	10	16.42	8.4	20.45	2SVDL201045	Z-Vent DW Lateral 20x45° Wye 10 Branch
20	18	30.85	8.4	32.75	2SVDL201845	Z-Vent DW Lateral 20x45° Wye 18 Branch

Z-VENT® Double Wall with Snap Lock

Double Wall Tee

A	B	C	D	Part Number	Description
3	3.54	5.75	4.00	2SVDT03	Z-Vent DW Tee 3 in
4	3.08	6.17	3.63	2SVDT04	Z-Vent DW Tee 4 in
5	3.58	6.67	4.50	2SVDT05	Z-Vent DW Tee 5 in
6	5.43	7.17	5.00	2SVDT06	Z-Vent DW Tee 6 in
7	5.96	7.67	5.50	2SVDT07	Z-Vent DW Tee 7 in
8	5.55	8.20	6.50	2SVDT08	Z-Vent DW Tee 8 in
9	6.48	8.00	6.50	2SVDT09	Z-Vent DW Tee 9 in
10	7.75	9.5	8.00	2SVDT10	Z-Vent DW Tee 10 in
12	8.25	9.75	8.00	2SVDT12	Z-Vent DW Tee 12 in
14	8.25	10.75	8.00	2SVDT14	Z-Vent DW Tee 14 in
16	9.25	11.75	9.50	2SVDT16	Z-Vent DW Tee 16 in
18	9.75	12.25	10.00	2SVDT18	Z-Vent DW Tee 18 in
20	10.75	13.25	11.00	2SVDT20	Z-Vent DW Tee 20 in
22	12.88	14.75	13.00	2SVDT22	Z-Vent DW Tee 22 in
24	13.25	15.75	15.00	2SVDT24	Z-Vent DW Tee 24 in

A tee is used to connect horizontal and vertical vent sections. Tee cap sold separately.

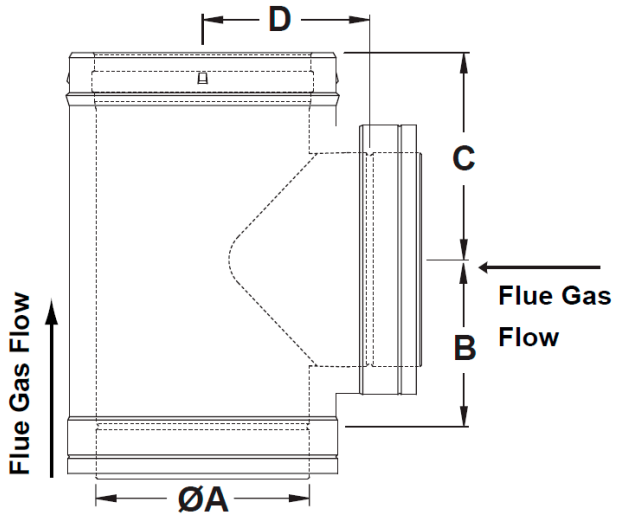

Double Wall Tee Reducing Branch

A	B	C	D	E	Part Number	Description
8	6	5.7	7.75	6.75	2SVDT0806	Z-Vent DW Tee 8 X 6 Branch
10	7	6.25	8.00	8.00	2SVDT1007	Z-Vent DW Tee 10 X 7 Branch
16	14	9.987	13.00	11.00	2SVDT1614	Z-Vent DW Tee 16 X 14 Branch
24	16	11.00	13.875	16.00	2SVDT2416	Z-Vent DW Tee 24 X 16 Branch

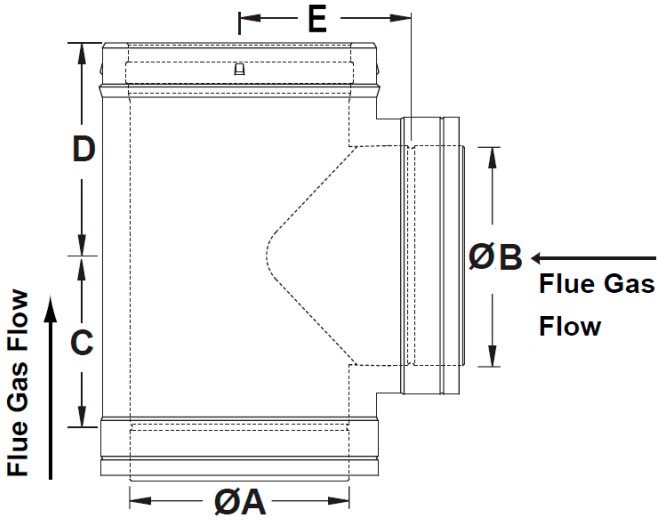

A Boot Tee is designed to allow a low flow resistance connection of horizontal and vertical sections. Tee cap is available separately.

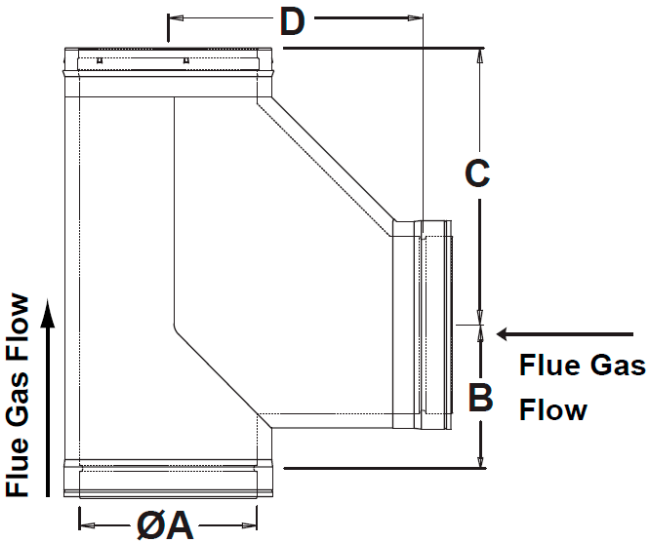

Double Wall Boot Tee

A	B	C	D	Part Number	Description
3	3.5	7.50	4.88	2SVDT03	Z-Vent DW Boot Tee 3 in
4	4	8.00	5.25	2SVDTBT04	Z-Vent DW Boot Tee 4 in
5	4.5	9.50	7.00	2SVDTBT05	Z-Vent DW Boot Tee 5 in
6	5.75	11.25	10.00	2SVDTBT06	Z-Vent DW Boot Tee 6 in
7	1.13	12.50	11.25	2SVDTBT07	Z-Vent DW Boot Tee 7 in
8	6.59	13.75	12.50	2SVDTBT08	Z-Vent DW Boot Tee 8 in
9	7.3	15.00	13.75	2SVDTBT09	Z-Vent DW Boot Tee 9 in
10	8.19	16.25	15.00	2SVDTBT10	Z-Vent DW Boot Tee 10 in
12	11.13	18.75	17.44	2SVDTBT12	Z-Vent DW Boot Tee 12 in
14	10.75	22.25	19.50	2SVDTBT14	Z-Vent DW Boot Tee 14 in
16	10.09	25.25	22.00	2SVDTBT16	Z-Vent DW Boot Tee 16 in
18	13.22	29.25	25.47	2SVDTBT18	Z-Vent DW Boot Tee 18 in
20	14.25	31.75	28.00	2SVDTBT20	Z-Vent DW Boot Tee 20 in
22	15.25	34.25	30.47	2SVDTBT22	Z-Vent DW Boot Tee 22 in
24	16.25	36.75	33.00	2SVDTBT24	Z-Vent DW Boot Tee 24 in

Z-VENT® Double Wall with Snap Lock

Double Wall Boot Tee Reducing Branch

A	B	C	D	E	Part Number	Description
6	4	5.5	6.5	7.5	2SVDTBT0604	Z-Vent DW Boot Tee 6 X 4 Branch
6	5	6.5	7.25	8.25	2SVDTBT0605	Z-Vent DW Boot Tee 6 X 5 Branch
8	6	7.5	8	10.5	2SVDTBT0806	Z-Vent DW Boot Tee 8 X 6 Branch
10	6	7.5	8	11	2SVDTBT1006	Z-Vent DW Boot Tee 10 X 6 Branch
10	8	9.5	9.5	12.5	2SVDTBT1008	Z-Vent DW Boot Tee 10 X 8 Branch
12	5	6.5	7.25	11.25	2SVDTBT1205	Z-Vent DW Boot Tee 12 X 5 Branch
12	6	7.5	8	12	2SVDTBT1206	Z-Vent DW Boot Tee 12 X 6 Branch
12	7	8.5	8.75	12.75	2SVDTBT1207	Z-Vent DW Boot Tee 12 X 7 Branch
12	8	9.5	9.5	13.5	2SVDTBT1208	Z-Vent DW Boot Tee 12 X 8 Branch
12	10	11.5	11	15	2SVDTBT1210	Z-Vent DW Boot Tee 12 X 10 Branch
14	6	7.5	9	13	2SVDTBT1406	Z-Vent DW Boot Tee 14 X 6 Branch
14	7	8.5	9.75	13.75	2SVDTBT1407	Z-Vent DW Boot Tee 14 X 7 Branch
14	8	9.5	10.5	14.5	2SVDTBT1408	Z-Vent DW Boot Tee 14 X 8 Branch
14	10	11.5	12	16	2SVDTBT1410	Z-Vent DW Boot Tee 14 X 10 Branch
14	12	13.5	13.5	17.5	2SVDTBT1412	Z-Vent DW Boot Tee 14 X 12 Branch
16	8	9.5	10.5	15.5	2SVDTBT1608	Z-Vent DW Boot Tee 16 X 8 Branch
16	10	11.5	12	17	2SVDTBT1610	Z-Vent DW Boot Tee 16 X 10 Branch
16	12	13.5	13.5	18.5	2SVDTBT1612	Z-Vent DW Boot Tee 16 X 12 Branch
18	10	11.5	12	18	2SVDTBT1810	Z-Vent DW Boot Tee 18 X 10 Branch
18	14	15.5	15	21	2SVDTBT1814	Z-Vent DW Boot Tee 18 X 14 Branch
18	16	17.5	16.5	22.5	2SVDTBT1816	Z-Vent DW Boot Tee 18 X 16 Branch
20	6	5.25	11.38	15.5	2SVDTBT2006	Z-Vent DW Boot Tee 20 X 6 Branch
20	8	9.5	10.5	17.5	2SVDTBT2008	Z-Vent DW Boot Tee 20 X 8 Branch
20	10	11.5	12	19	2SVDTBT2010	Z-Vent DW Boot Tee 20 X 10 Branch
20	14	15.5	15	22	2SVDTBT2014	Z-Vent DW Boot Tee 20 X 14 Branch
22	8	9.5	10.5	18.5	2SVDTBT2208	Z-Vent DW Boot Tee 22 X 8 Branch
22	12	13.5	13.5	21.5	2SVDTBT2212	Z-Vent DW Boot Tee 22 X 12 Branch
22	14	15.5	15	23	2SVDTBT2214	Z-Vent DW Boot Tee 22 X 14 Branch
24	8	8.5	19.25	25.5	2SVDTBT2408	Z-Vent DW Boot Tee 24 X 8 Branch
24	10	9.5	20.25	24.5	2SVDTBT2410	Z-Vent DW Boot Tee 24 X 10 Branch

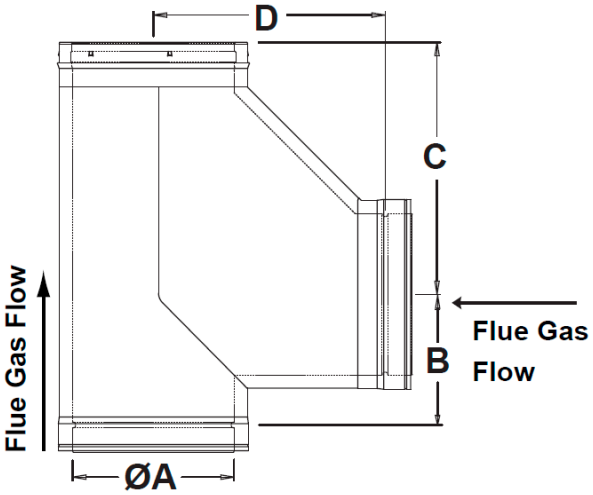

Double Wall Tee Cap

A	B	Part Number	Description
3	2	2SVDTC03	Z-Vent DW Tee Cap 3 in
4	2	2SVDTC04	Z-Vent DW Tee Cap 4 in
5	2	2SVDTC05	Z-Vent DW Tee Cap 5 in
6	2	2SVDTC06	Z-Vent DW Tee Cap 6 in
7	2	2SVDTC07	Z-Vent DW Tee Cap 7 in
8	2	2SVDTC08	Z-Vent DW Tee Cap 8 in
9	2	2SVDTC09	Z-Vent DW Tee Cap 9 in
10	2	2SVDTC10	Z-Vent DW Tee Cap 10 in
12	2	2SVDTC12	Z-Vent DW Tee Cap 12 in
14	2	2SVDTC14	Z-Vent DW Tee Cap 14 in
16	2	2SVDTC16	Z-Vent DW Tee Cap 16 in
18	2	2SVDTC18	Z-Vent DW Tee Cap 18 in
20	2	2SVDTC20	Z-Vent DW Tee Cap 20 in
22	2	2SVDTC22	Z-Vent DW Tee Cap 22 in
24	2	2SVDTC24	Z-Vent DW Tee Cap 24 in

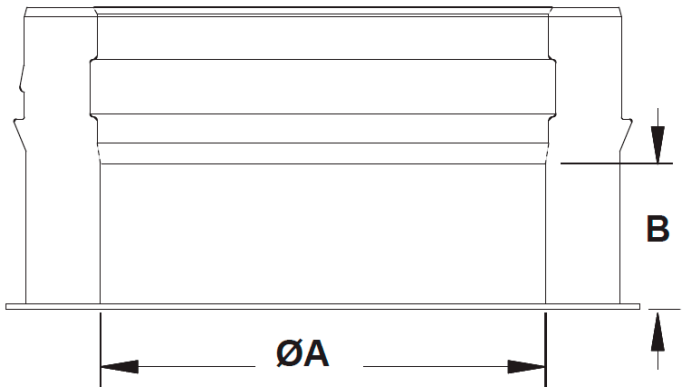

A tee cap with drain is required at the bottom of a vertical stack. High temperature silicone tubing is available separately.

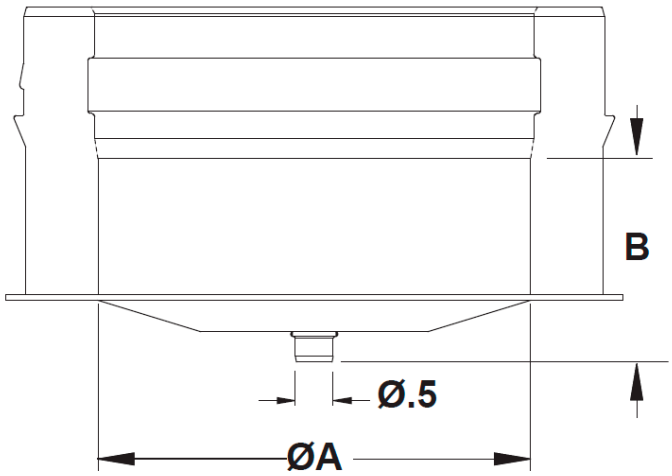

Double Wall Tee Cap with Drain

A	B	Part Number	Description
3	4	2SVDTCD03	Z-Vent DW Tee Cap with Drain 3 in
4	4	2SVDTCD04	Z-Vent DW Tee Cap with Drain 4 in
5	4	2SVDTCD05	Z-Vent DW Tee Cap with Drain 5 in
6	4	2SVDTCD06	Z-Vent DW Tee Cap with Drain 6 in
7	4	2SVDTCD07	Z-Vent DW Tee Cap with Drain 7 in
8	4	2SVDTCD08	Z-Vent DW Tee Cap with Drain 8 in
9	4	2SVDTCD09	Z-Vent DW Tee Cap with Drain 9 in
10	4	2SVDTCD10	Z-Vent DW Tee Cap with Drain 10 in
12	4	2SVDTCD12	Z-Vent DW Tee Cap with Drain 12 in
14	4	2SVDTCD14	Z-Vent DW Tee Cap with Drain 14 in
16	4	2SVDTCD16	Z-Vent DW Tee Cap with Drain 16 in
18	4	2SVDTCD18	Z-Vent DW Tee Cap with Drain 18 in
20	4	2SVDTCD20	Z-Vent DW Tee Cap with Drain 20 in
22	4	2SVDTCD22	Z-Vent DW Tee Cap with Drain 22 in
24	4	2SVDTCD24	Z-Vent DW Tee Cap with Drain 24 in

Z-VENT® Double Wall with Snap Lock

Double Wall End Cap w/.5 Drain

A	B	C	Part Number	Description
5	7	7.34	2SVDECD05	Z-Vent DW Horizontal End Cap w/Drain 5 in
6	8	7.59	2SVDECD06	Z-Vent DW Horizontal End Cap w/Drain 6 in
7	9	7.85	2SVDECD07	Z-Vent DW Horizontal End Cap w/Drain 7 in
8	10	8.1	2SVDECD08	Z-Vent DW Horizontal End Cap w/Drain 8 in
9	11	8.63	2SVDECD09	Z-Vent DW Horizontal End Cap w/Drain 9 In
10	12	8.63	2SVDECD10	Z-Vent DW Horizontal End Cap w/Drain 10 in
12	14	8	2SVDECD12	Z-Vent DW Horizontal End Cap w/Drain 12 k
14	16	9	2SVDECD14	Z-Vent DW Horizontal End Cap w/Drain 14 In
18	20	9	2SVDECD18	Z-Vent DW Horizontal End Cap w/Drain 18 In
22	22	9	2SVDECD22	Z-Vent DW Horizontal End Cap w/Drain 22 In

Used to drain condensate from the vent system. High temperature drain tube kit sold separately.

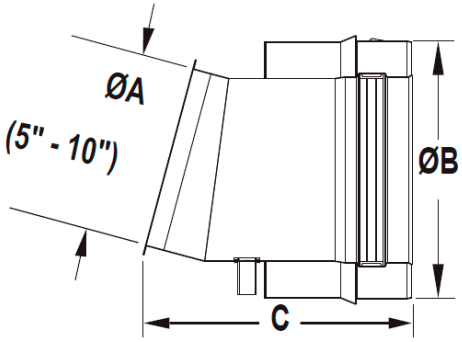

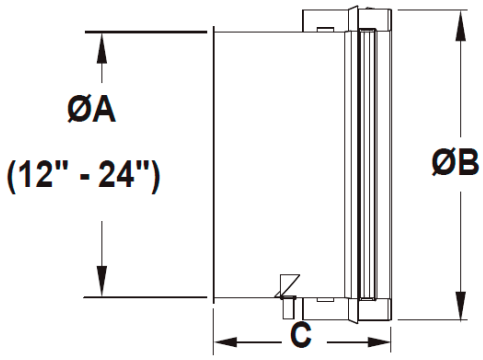

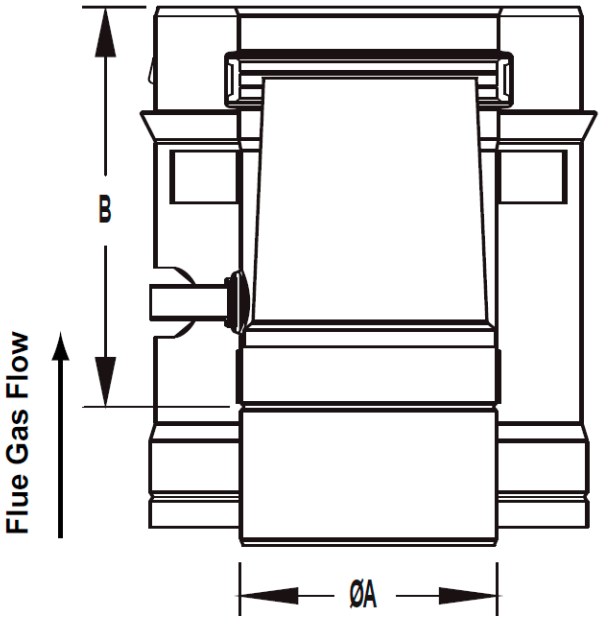

Double Wall Vertical/Horizontal Drain Pipe w/.5" Drain

A	B	Part Number	Description
3	5.75	2SVDVDP03	Z-Vent DW Drain Pipe 3 in
4	5.875	2SVDVDP04	Z-Vent DW Drain Pipe 4 in
5	5.7	2SVDVDP05	Z-Vent DW Drain Pipe 5 in
6	5.75	2SVDVDP06	Z-Vent DW Drain Pipe 6 in
7	5.75	2SVDVDP07	Z-Vent DW Drain Pipe 7 in
8	5.75	2SVDVDP08	Z-Vent DW Drain Pipe 8 in
9	7.75	2SVDVDP09	Z-Vent DW Drain Pipe 9 in
10	7.75	2SVDVDP10	Z-Vent DW Drain Pipe 10 in
12	5.75	2SVDVDP12	Z-Vent DW Drain Pipe 12 in
14	6.75	2SVDVDP14	Z-Vent DW Drain Pipe 14 in
16	6.75	2SVDVDP16	Z-Vent DW Drain Pipe 16 in
20	11.5	2SVDVDP20	Z-Vent DW Drain Pipe 20 in
22	11.75	2SVDVDP22	Z-Vent DW Drain Pipe 22 in
24	11.75	2SVDVDP24	Z-Vent DW Drain Pipe 24 in

Double Wall Fixed Blade Damper

A	B	Part Number	Description
3	9.75	2SVDID03	Z-Vent DW Fixed Blade Damper 3 in
4	9.75	2SVDID04	Z-Vent DW Fixed Blade Damper 4 in
5	9.75	2SVDID05	Z-Vent DW Fixed Blade Damper 5 in
6	9.75	2SVDID06	Z-Vent DW Fixed Blade Damper 6 in
7	9.75	2SVDID07	Z-Vent DW Fixed Blade Damper 7 in
8	9.75	2SVDID08	Z-Vent DW Fixed Blade Damper 8 in
9	9.75	2SVDID09	Z-Vent DW Fixed Blade Damper 9 in
10	9.75	2SVDID10	Z-Vent DW Fixed Blade Damper 10 in
12	9.75	2SVDID12	Z-Vent DW Fixed Blade Damper 12 in
14	10.75	2SVDID14	Z-Vent DW Fixed Blade Damper 14 in
16	10.75	2SVDID16	Z-Vent DW Fixed Blade Damper 16 in
18	10.75	2SVDID18	Z-Vent DW Fixed Blade Damper 18 in
20	10.75	2SVDID20	Z-Vent DW Fixed Blade Damper 20 in
22	10.75	2SVDID22	Z-Vent DW Fixed Blade Damper 22 in
24	10.75	2SVDID24	Z-Vent DW Fixed Blade Damper 24 in

Used to adjust flue gas flow in positive or negative pressure vent systems. Comes with heavy duty locking ⅜" regulator set and extended shaft. Remove outer double wall jacket for use on single wall vent.

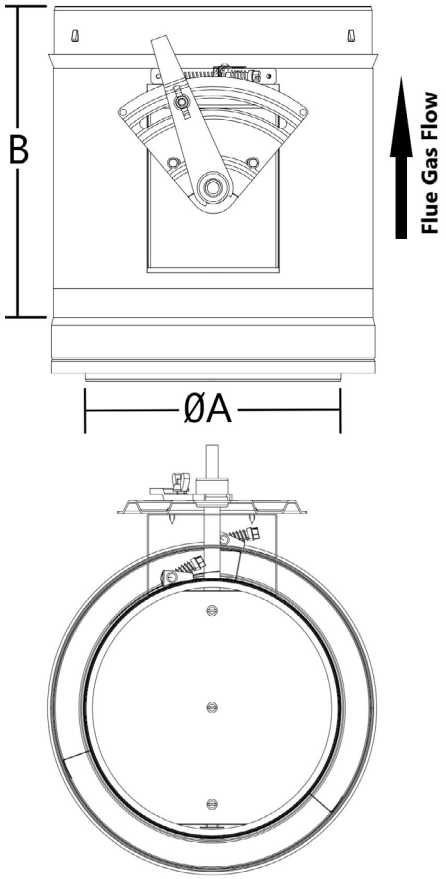

Z-VENT® Double Wall with Snap Lock

Double Wall Pipe

Available in diameters 3in to 24in. The female end of each Z-VENT® component incorporates a *Double Fail Safe™ self sealing gasket*. Examine all components to ensure that gasket integrity has remained during shipping. Gaskets must be in proper position or flue gases could leak resulting in carbon monoxide poisoning. The installation shall be in accordance with the manufacturer's installation instructions.

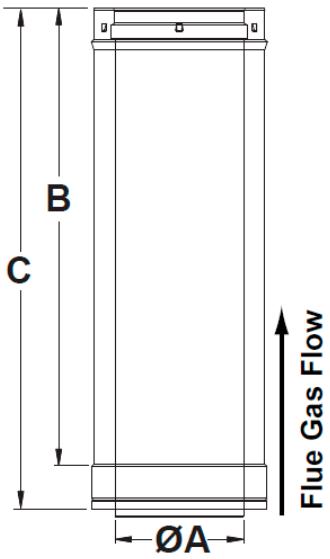

A	B	C	Part Number	Description	
3in	3.75	5.75	2SVDP03.5	Z-Vent Pipe	3in x 6in
	9.75	11.75	2SVDP0301	Z-Vent Pipe	3in x 1 ft
	15.75	17.75	2SVDP0301.5	Z-Vent Pipe	3in x 1.5ft
	21.75	23.75	2SVDP0302	Z-Vent Pipe	3in x 2ft
	33.75	35.75	2SVDP0303	Z-Vent Pipe	3in x 3ft
	45.75	47.75	2SVDP0304	Z-Vent Pipe	3in x 4ft
4in	3.75	5.75	2SVDP04.5	Z-Vent Pipe	4in x 6in
	9.75	11.75	2SVDP0401	Z-Vent Pipe	4in x 1 ft
	15.75	17.75	2SVDP0401.5	Z-Vent Pipe	4in x 1.5ft
	21.75	23.75	2SVDP0402	Z-Vent Pipe	4in x 2ft
	33.75	35.75	2SVDP0403	Z-Vent Pipe	4in x 3ft
	45.75	47.75	2SVDP0404	Z-Vent Pipe	4in x 4ft
5in	3.75	5.75	2SVDP05.5	Z-Vent Pipe	5in x 6in
	9.75	11.75	2SVDP0501	Z-Vent Pipe	5in x 1 ft
	15.75	17.75	2SVDP0501.5	Z-Vent Pipe	5in x 1.5ft
	21.75	23.75	2SVDP0502	Z-Vent Pipe	5in x 2ft
	33.75	35.75	2SVDP0503	Z-Vent Pipe	5in x 3ft
	45.75	47.75	2SVDP0504	Z-Vent Pipe	5in x 4ft
6in	3.75	5.75	2SVDP06.5	Z-Vent Pipe	6in x 6in
	9.75	11.75	2SVDP0601	Z-Vent Pipe	6in x 1 ft
	15.75	17.75	2SVDP0601.5	Z-Vent Pipe	6in x 1.5ft
	21.75	23.75	2SVDP0602	Z-Vent Pipe	6in x 2ft
	33.75	35.75	2SVDP0603	Z-Vent Pipe	6in x 3ft
	45.75	47.75	2SVDP0604	Z-Vent Pipe	6in x 4ft
7in	3.75	5.75	2SVDP07.5	Z-Vent Pipe	7in x 6in
	9.75	11.75	2SVDP0701	Z-Vent Pipe	7in x 1 ft
	15.75	17.75	2SVDP0701.5	Z-Vent Pipe	7in x 1.5ft
	21.75	23.75	2SVDP0702	Z-Vent Pipe	7in x 2ft
	33.75	35.75	2SVDP0703	Z-Vent Pipe	7in x 3ft
	45.75	47.75	2SVDP0704	Z-Vent Pipe	7in x 4ft
8in	3.75	5.75	2SVDP08.5	Z-Vent Pipe	8in x 6in
	9.75	11.75	2SVDP0801	Z-Vent Pipe	8in x 1 ft
	15.75	17.75	2SVDP0801.5	Z-Vent Pipe	8in x 1.5ft
	21.75	23.75	2SVDP0802	Z-Vent Pipe	8in x 2ft
	33.75	35.75	2SVDP0803	Z-Vent Pipe	8in x 3ft
	45.75	47.75	2SVDP0804	Z-Vent Pipe	8in x 4ft
9in	3.75	5.75	2SVDP09.5	Z-Vent Pipe	9in x 6in
	9.75	11.75	2SVDP0901	Z-Vent Pipe	9in x 1 ft
	15.75	17.75	2SVDP0901.5	Z-Vent Pipe	9in x 1.5ft
	21.75	23.75	2SVDP0902	Z-Vent Pipe	9in x 2ft
	33.75	35.75	2SVDP0903	Z-Vent Pipe	9in x 3ft

A	B	C	Part Number	Description	
10in	3.75	5.75	2SVDP10.5	Z-Vent Pipe	10in x 6in
	9.75	11.75	2SVDP1001	Z-Vent Pipe	10in x 1 ft
	15.75	17.75	2SVDP1001.5	Z-Vent Pipe	10in x 1.5ft
	21.75	23.75	2SVDP1002	Z-Vent Pipe	10in x 2ft
	33.75	35.75	2SVDP1003	Z-Vent Pipe	10in x 3ft
12in	3.75	5.75	2SVDP12.5	Z-Vent Pipe	12in x 6in
	9.75	11.75	2SVDP1201	Z-Vent Pipe	12in x 1 ft
	15.75	17.75	2SVDP1201.5	Z-Vent Pipe	12in x 1.5ft
	21.75	23.75	2SVDP1202	Z-Vent Pipe	12in x 2ft
	33.75	35.75	2SVDP1203	Z-Vent Pipe	12in x 3ft
14in	5.75	8.75	2SVDP14.5	Z-Vent Pipe	14in x 6in
	8.75	11.75	2SVDP1401	Z-Vent Pipe	14in x 1 ft
	14.75	17.75	2SVDP1401.5	Z-Vent Pipe	14in x 1.5ft
	20.75	23.75	2SVDP1402	Z-Vent Pipe	14in x 2ft
	32.75	35.75	2SVDP1403	Z-Vent Pipe	14in x 3ft
16in	5.75	8.75	2SVDP16.5	Z-Vent Pipe	16in x 6in
	8.75	11.75	2SVDP1601	Z-Vent Pipe	16in x 1 ft
	14.75	17.75	2SVDP1601.5	Z-Vent Pipe	16in x 1.5ft
	20.75	23.75	2SVDP1602	Z-Vent Pipe	16in x 2ft
	32.75	35.75	2SVDP1603	Z-Vent Pipe	16in x 3ft
18in	5.75	8.75	2SVDP18.5	Z-Vent Pipe	18in x 6in
	8.75	11.75	2SVDP1801	Z-Vent Pipe	18in x 1 ft
	14.75	17.75	2SVDP1801.5	Z-Vent Pipe	18in x 1.5ft
	20.75	23.75	2SVDP1802	Z-Vent Pipe	18in x 2ft
	32.75	35.75	2SVDP1803	Z-Vent Pipe	18in x 3ft
20in	5.75	8.75	2SVDP20.5	Z-Vent Pipe	20in x 6in
	8.75	11.75	2SVDP2001	Z-Vent Pipe	20in x 1 ft
	14.75	17.75	2SVDP2001.5	Z-Vent Pipe	20in x 1.5ft
	20.75	23.75	2SVDP2002	Z-Vent Pipe	20in x 2ft
	32.75	35.75	2SVDP2003	Z-Vent Pipe	20in x 3ft
22in	5.75	8.75	2SVDP22.5	Z-Vent Pipe	22in x 6in
	8.75	11.75	2SVDP2201	Z-Vent Pipe	22in x 1 ft
	14.75	17.75	2SVDP2201.5	Z-Vent Pipe	22in x 1.5ft
	20.75	23.75	2SVDP2202	Z-Vent Pipe	22in x 2ft
	32.75	35.75	2SVDP2203	Z-Vent Pipe	22in x 3ft
24in	5.75	8.75	2SVDP24.5	Z-Vent Pipe	24in x 6in
	8.75	11.75	2SVDP2401	Z-Vent Pipe	24in x 1 ft
	14.75	17.75	2SVDP2401.5	Z-Vent Pipe	24in x 1.5ft
	20.75	23.75	2SVDP2402	Z-Vent Pipe	24in x 2ft
	32.75	35.75	2SVDP2403	Z-Vent Pipe	24in x 3ft

Double Wall Adjustable Pipe

A	B	C	Part Number	Description
3	9.50	13.90	2SVDALM3	Z-Vent DW Adjustable Pipe 3 in
4	9.50	13.90	2SVDALM4	Z-Vent DW Adjustable Pipe 4 in
5	8.50	14.38	2SVDPA05	Z-Vent DW Adjustable Pipe 5 in
6	8.50	14.38	2SVDPA06	Z-Vent DW Adjustable Pipe 6 in
7	8.50	14.38	2SVDPA07	Z-Vent DW Adjustable Pipe 7 in
8	8.50	14.38	2SVDPA08	Z-Vent DW Adjustable Pipe 8 in
9	8.50	14.50	2SVDPA09	Z-Vent DW Adjustable Pipe 9 in
10	8.50	14.50	2SVDPA10	Z-Vent DW Adjustable Pipe 10 in
12	8.50	14.50	2SVDPA12	Z-Vent DW Adjustable Pipe 12 in
14	9.00	13.50	2SVDPA14	Z-Vent DW Adjustable Pipe 14 in
16	9.00	13.50	2SVDPA16	Z-Vent DW Adjustable Pipe 16 in
18	9.00	13.50	2SVDPA18	Z-Vent DW Adjustable Pipe 18 in
20	9.00	13.50	2SVDPA20	Z-Vent DW Adjustable Pipe 20 in
22	9.00	13.50	2SVDPA22	Z-Vent DW Adjustable Pipe 22 in
24	9.00	13.50	2SVDPA24	Z-Vent DW Adjustable Pipe 24 in

The use of adjustable pipe may be required when the system must be located within extremely tight installation parameters.

IMPORTANT:

**Adjustable pipe can only be used with an adjacent pipe. Not to be inserted into fittings.*

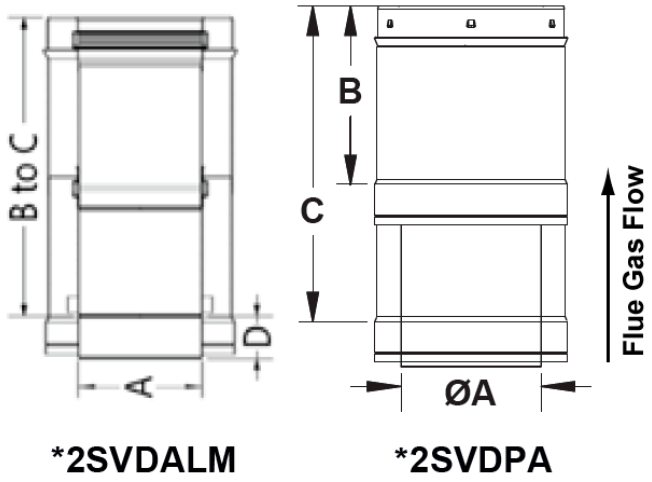

Vent length with test port allows easy access for flue gas analysis.

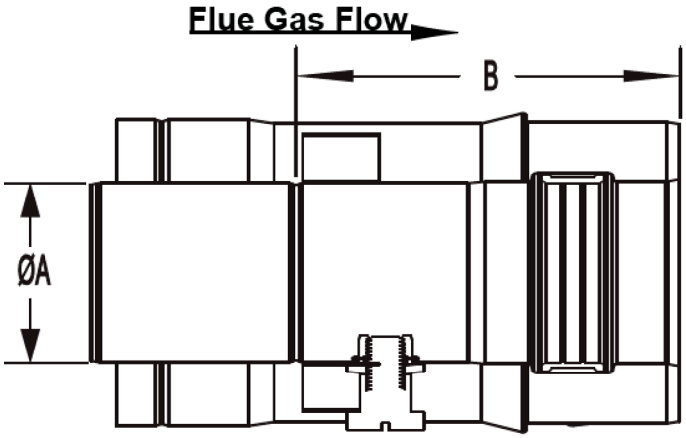

Double Wall Pipe with Inspection Port

A	B	Part Number	Description
3	3.75	2SVDPRT03	Z-Vent DW Pipe w/Inspection Port 3in x 6in
4	3.75	2SVDPRT04.5	Z-Vent DW Pipe w/Inspection Port 4in x 6in
5	3.75	2SVDPRT05.5	Z-Vent DW Pipe w/Inspection Port 5in x 6in
6	3.75	2SVDPRT06.5	Z-Vent DW Pipe w/Inspection Port 6in x 6in
7	3.75	2SVDPRT07.5	Z-Vent DW Pipe w/Inspection Port 7in x 6in
8	4.24	2SVDPRT08.5	Z-Vent DW Pipe w/Inspection Port 8in x 6in
9	3.95	2SVDPRT09.5	Z-Vent DW Pipe w/Inspection Port 9in x 6in
10	3.75	2SVDPRT10.5	Z-Vent DW Pipe w/Inspection Port 10in x 6in
12	3.75	2SVDPRT12.5	Z-Vent DW Pipe w/Inspection Port 12in x 6in
14	4.75	2SVDPRT14.5	Z-Vent DW Pipe w/Inspection Port 14in x 6in

Z-VENT® Double Wall with Snap Lock

Double Wall 15° Elbow

A	B	C	Part No	Description
3	2.45	4.20	2SVDE0315	Z-Vent DW Elbow 15° X 3 in
4	2.51	4.26	2SVDE0415	Z-Vent DW Elbow 15° X 4 in
5	2.58	4.33	2SVDE0515	Z-Vent DW Elbow 15° X 5 in
6	2.64	4.39	2SVDE0615	Z-Vent DW Elbow 15° X 6 in
7	2.71	4.46	2SVDE0715	Z-Vent DW Elbow 15° X 7 in
8	2.78	4.53	2SVDE0815	Z-Vent DW Elbow 15° X 8 in
9	2.84	4.59	2SVDE0915	Z-Vent DW Elbow 15° X 9 in
10	2.91	4.66	2SVDE1015	Z-Vent DW Elbow 15° X 10 in
12	3.04	4.79	2SVDE1215	Z-Vent DW Elbow 15° X 12 in
14	3.17	5.92	2SVDE1415	Z-Vent DW Elbow 15° X 14 in
16	3.30	6.05	2SVDE1615	Z-Vent DW Elbow 15° X 16 in
18	3.43	6.18	2SVDE1815	Z-Vent DW Elbow 15° X 18 in
20	3.57	6.32	2SVDE2015	Z-Vent DW Elbow 15° X 20 in
22	3.70	6.45	2SVDE2215	Z-Vent DW Elbow 15° X 22 in
24	3.83	6.58	2SVDE2415	Z-Vent DW Elbow 15° X 24 in

15° elbows are used when a direction change or offset is required.

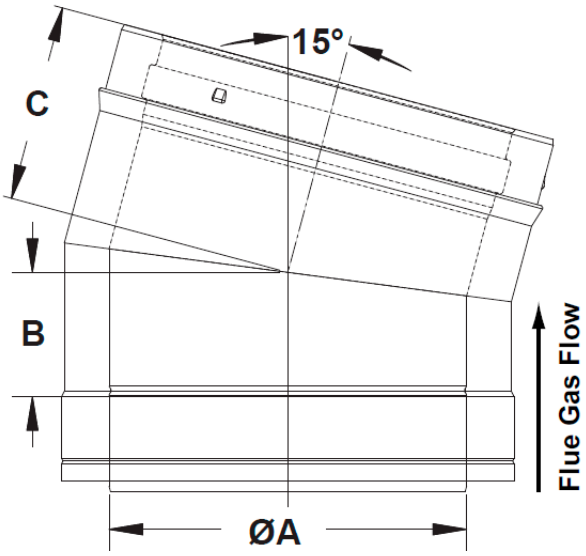

30° elbows are used when a direction change or offset is required.

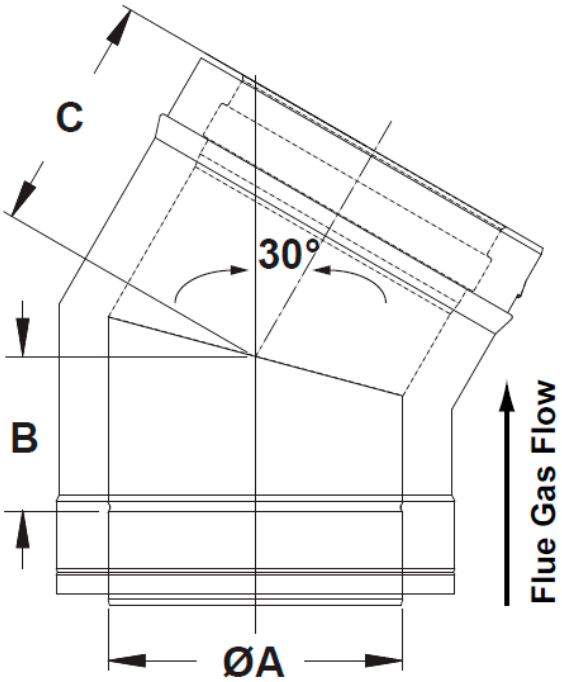

Double Wall 30° Elbow

A	B	C	Part No	Description
3	1.90	4.40	2SVDE0330	Z-Vent DW Elbow 30° X 3 in
4	2.79	4.54	2SVDE0430	Z-Vent DW Elbow 30° X 4 in
5	2.92	4.67	2SVDE0530	Z-Vent DW Elbow 30° X 5 in
6	3.05	4.80	2SVDE0630	Z-Vent DW Elbow 30° X 6 in
7	3.19	4.94	2SVDE0730	Z-Vent DW Elbow 30° X 7 in
8	3.32	5.07	2SVDE0830	Z-Vent DW Elbow 30° X 8 in
9	3.46	5.21	2SVDE0930	Z-Vent DW Elbow 30° X 9 in
10	3.59	5.35	2SVDE1030	Z-Vent DW Elbow 30° X 10 in
12	3.86	5.61	2SVDE1230	Z-Vent DW Elbow 30° X 12 in
14	4.38	6.88	2SVDE1430	Z-Vent DW Elbow 30° X 14 in
16	4.64	7.14	2SVDE1630	Z-Vent DW Elbow 30° X 16 in
18	4.91	7.41	2SVDE1830	Z-Vent DW Elbow 30° X 18 in
20	5.18	7.68	2SVDE2030	Z-Vent DW Elbow 30° X 20 in
22	5.45	7.95	2SVDE2230	Z-Vent DW Elbow 30° X 22 in
24	5.72	8.22	2SVDE2430	Z-Vent DW Elbow 30° X 24 in

Double Wall 45° Elbow

A	B	C	Part Number	Description
3	1.62	3.37	2SVDE0345	Z-Vent DW Elbow 45° X 3 in
4	1.83	3.58	2SVDE0445	Z-Vent DW Elbow 45° X 4 in
5	4.16	5.91	2SVDE0545	Z-Vent DW Elbow 45° X 5 in
6	4.37	6.12	2SVDE0645	Z-Vent DW Elbow 45° X 6 in
7	4.58	6.33	2SVDE0745	Z-Vent DW Elbow 45° X 7 in
8	4.79	6.54	2SVDE0845	Z-Vent DW Elbow 45° X 8 in
9	5.00	6.75	2SVDE0945	Z-Vent DW Elbow 45° X 9 in
10	5.20	6.96	2SVDE1045	Z-Vent DW Elbow 45° X 10 in
12	5.61	7.36	2SVDE1245	Z-Vent DW Elbow 45° X 12 in
14	6.03	8.78	2SVDE1445	Z-Vent DW Elbow 45° X 14 in
16	6.44	9.19	2SVDE1645	Z-Vent DW Elbow 45° X 16 in
18	6.86	9.61	2SVDE1845	Z-Vent DW Elbow 45° X 18 in
20	7.27	10.02	2SVDE2045	Z-Vent DW Elbow 45° X 20 in
22	7.69	10.44	2SVDE2245	Z-Vent DW Elbow 45° X 22 in
24	8.10	10.85	2SVDE2445	Z-Vent DW Elbow 45° X 24 in

45° elbows are used when a direction change or offset is required.

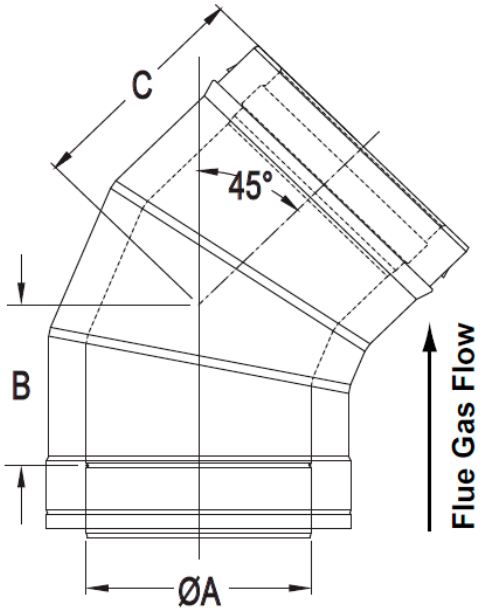

90° elbows are used when a direction change or offset is required.

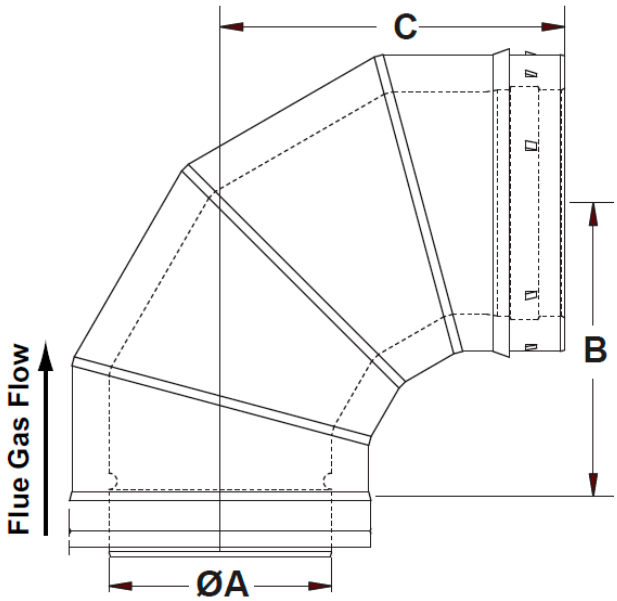

Double Wall 90° Elbow

A	B	C	Part Number	Description
3	4.72	6.18	2SVDE0390	Z-Vent DW Elbow 90° X 3 in
4	5.22	6.66	2SVDE0490	Z-Vent DW Elbow 90° X 4 in
5	6.63	8.32	2SVDE0590	Z-Vent DW Elbow 90° X 5 in
6	7.50	9.28	2SVDE0690	Z-Vent DW Elbow 90° X 6 in
7	8.28	9.84	2SVDE0790	Z-Vent DW Elbow 90° X 7 in
8	8.13	9.85	2SVDE0890	Z-Vent DW Elbow 90° X 8 in
9	9.30	10.88	2SVDE0990	Z-Vent DW Elbow 90° X 9 in
10	9.50	11.20	2SVDE1090	Z-Vent DW Elbow 90° X 10 in
12	10.50	12.20	2SVDE1290	Z-Vent DW Elbow 90° X 12 in
14	11.15	12.75	2SVDE1490	Z-Vent DW Elbow 90° X 14 in
16	12.00	14.53	2SVDE1690	Z-Vent DW Elbow 90° X 16 in
18	13.00	15.58	2SVDE1890	Z-Vent DW Elbow 90° X 18 in
20	14.50	17.00	2SVDE2090	Z-Vent DW Elbow 90° X 20 in
22	16.00	19.00	2SVDE2290	Z-Vent DW Elbow 90° X 22 in
24	18.66	21.20	2SVDE2490	Z-Vent DW Elbow 90° X 24 in

Z-VENT® Double Wall with Snap Lock

Low Resistance Double Wall Rain Cap

A	C	D	Part Number	Description
3			2SVDRC03	Z-Vent DW Low Resistance Rain Cap 3in
4	7	9	2SVDRC04	Z-Vent DW Low Resistance Rain Cap 4in
5	7.5	11	2SVDRC05	Z-Vent DW Low Resistance Rain Cap 5in
6	8	12.75	2SVDRC06	Z-Vent DW Low Resistance Rain Cap 6in
7	8.5	14	2SVDRC07	Z-Vent DW Low Resistance Rain Cap 7in
8	9	15	2SVDRC08	Z-Vent DW Low Resistance Rain Cap 8in
9	9.5	18.5	2SVDRC09	Z-Vent DW Low Resistance Rain Cap 9in
10	10.38	18.5	2SVDRC10	Z-Vent DW Low Resistance Rain Cap 10in
12	12	22.5	2SVDRC12	Z-Vent DW Low Resistance Rain Cap 12in
14	13	25.75	2SVDRC14	Z-Vent DW Low Resistance Rain Cap 14in
16	13.5	28.8	2SVDRC16	Z-Vent DW Low Resistance Rain Cap 16in
18	15	32.4	2SVDRC18	Z-Vent DW Low Resistance Rain Cap 18in
20	15.5	34.4	2SVDRC20	Z-Vent DW Low Resistance Rain Cap 20in
22	15.5	36	2SVDRC22	Z-Vent DW Low Resistance Rain Cap 22in
24	15.5	37.88	2SVDRC24	Z-Vent DW Low Resistance Rain Cap 24in

A low resistance rain cap is designed to terminate a vertical stack and prevent the entrance of debris or rain into the vent. It also proves low resistance to flue gas flow.

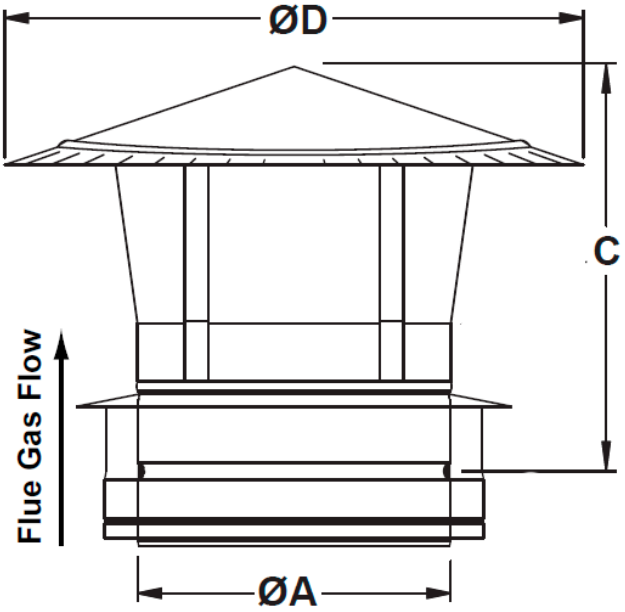

A rain cap is designed to terminate a vertical stack and prevent the entrance of debris or rain into the vent. Includes wind band to prevent draft loss.

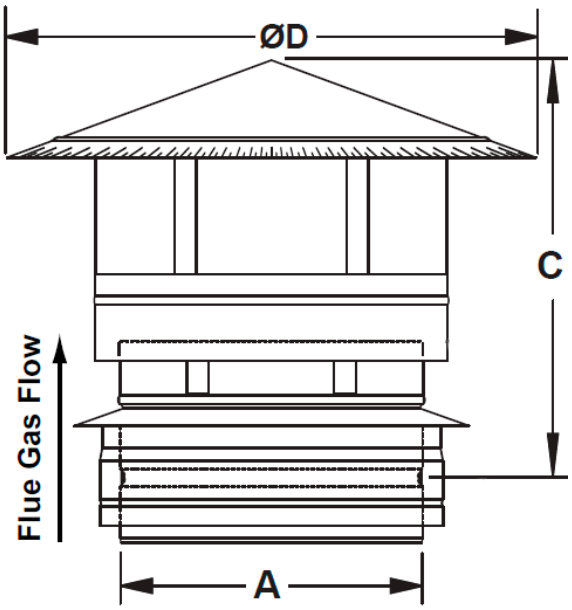

Double Wall Rain Cap with Wind Band

A	C	D	Part Number	Description
3	7.38	9	2SVDRCX03	DW Rain Cap w/wind band 3in
4	7.38	9	2SVDRCX04	DW Rain Cap w/ wind band 4in
5	7.38	9	2SVDRCX05	DW Rain Cap w/wind band 5in
6	9.5	12	2SVDRCX06	DW Rain Cap w/wind band 6in
7	9.5	12	2SVDRCX07	DW Rain Cap w/wind band 7in
8	9.5	15	2SVDRCX08	DW Rain Cap w/wind band 8in
9	11.5	18.5	2SVDRCX09	DW Rain Cap w/wind band 9in
10	11.5	18.5	2SVDRCX10	DW Rain Cap w/wind band 10in
12	12	21	2SVDRCX12	DW Rain Cap w/wind band 12in
14	13.5	23	2SVDRCX14	DW Rain Cap w/wind band 14in
16	13.5	25	2SVDRCX16	DW Rain Cap w/wind band 16in
18	14.25	29.63	2SVDRCX18	DW Rain Cap w/wind band 18in
20	15	31.5	2SVDRCX20	DW Rain Cap w/wind band 20in
22	15.25	33.5	2SVDRCX22	DW Rain Cap w/wind band 22in
24	15.5	34.5	2SVDRCX24	DW Rain Cap w/wind band 24in

Double Wall Termination Box

A	B	C	D	Part Number	Description
3	10.00	2.5	8.00	2SVDRTX03	Z-Vent DW Termination Box 3 in
4	10.00	2.5	8.00	2SVDRTX04	Z-Vent DW Termination Box 4 in
5	4.13	3.5	2.00	2SVDRTX05	Z-Vent DW Termination Box 5 in
6	4.75	4	2.00	2SVDRTX06	Z-Vent DW Termination Box 6 in
7	5.25	4.5	2.00	2SVDRTX07	Z-Vent DW Termination Box 7 in
8	5.75	5	2.00	2SVDRTX08	Z-Vent DW Termination Box 8 in
9	6.13	5.5	2.00	2SVDRTX09	Z-Vent DW Termination Box 9 in
10	7.00	6	2.00	2SVDRTX10	Z-Vent DW Termination Box 10 in
12	8.25	7	2.00	2SVDRTX12	Z-Vent DW Termination Box 12 in
14	9.25	8	2.00	2SVDRTX14	Z-Vent DW Termination Box 14 in
16	10.25	9	2.00	2SVDRTX16	Z-Vent DW Termination Box 16 in
18	10.50	10	2.00	2SVDRTX18	Z-Vent DW Termination Box 18 in
20	12.00	11	2.00	2SVDRTX20	Z-Vent DW Termination Box 20 in
22	13.00	12	2.00	2SVDRTX22	Z-Vent DW Termination Box 22 in
24	14.00	13	2.00	2SVDRTX24	Z-Vent DW Termination Box 24 in

A wall termination is used to terminate a horizontal vent. The special design resists winds from affecting flue gas flow.

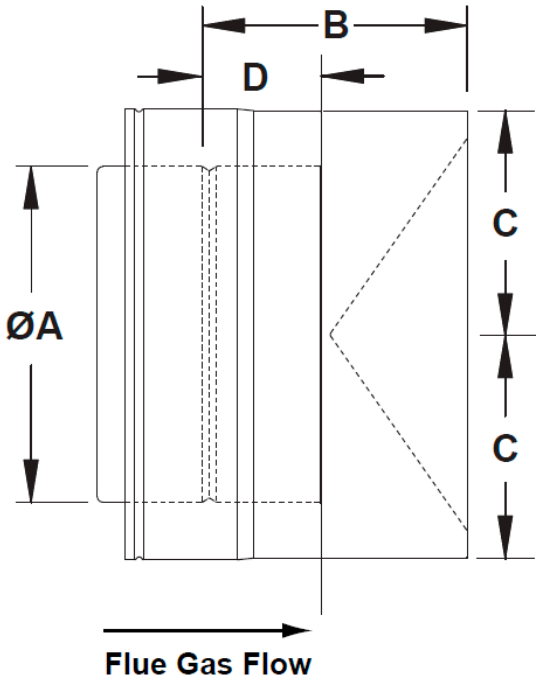

Designed to increase stack velocity. Extremely low resistance. It is recommended to use tee cap with drain at base of stack.

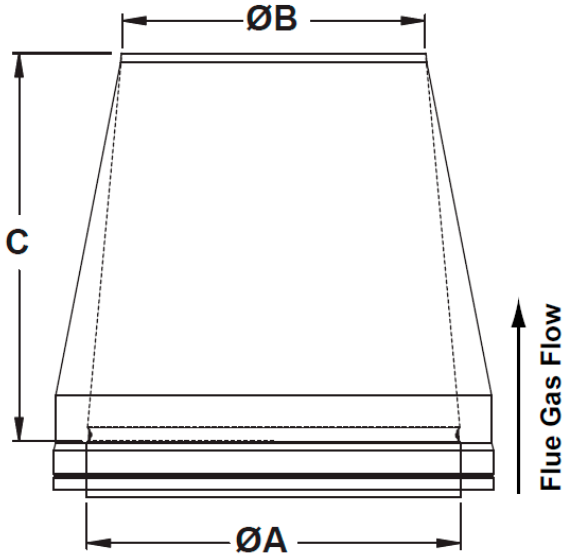

Double Wall Exit Cone

A	B	C	Part Number	Description
3	2.50	8.00	2SVDXITC03	Z-Vent DW Exit Cone 3 in
4	3.25	8.40	2SVDXITC04	Z-Vent DW Exit Cone 4 in
5	4.07	8.62	2SVDXITC05	Z-Vent DW Exit Cone 5 in
6	4.87	9.25	2SVDXITC06	Z-Vent DW Exit Cone 6 in
7	5.69	9.88	2SVDXITC07	Z-Vent DW Exit Cone 7 in
8	6.50	10.40	2SVDXITC08	Z-Vent DW Exit Cone 8 in
9	7.31	10.88	2SVDXITC09	Z-Vent DW Exit Cone 9 in
10	8.125	11.25	2SVDXITC10	Z-Vent DW Exit Cone 10 in
12	9.88	12.75	2SVDXITC12	Z-Vent DW Exit Cone 12 in
14	11.75	13.63	2SVDXITC14	Z-Vent DW Exit Cone 14 in
16	13.25	14.63	2SVDXITC16	Z-Vent DW Exit Cone 16 in
18	14.75	15.63	2SVDXITC18	Z-Vent DW Exit Cone 18 in
20	16.50	16.63	2SVDXITC20	Z-Vent DW Exit Cone 20 in
22	18.00	17.63	2SVDXITC22	Z-Vent DW Exit Cone 22 in
24	19.50	18.63	2SVDXITC24	Z-Vent DW Exit Cone 24 in

Z-VENT® Double Wall with Snap Lock

Double Wall Termination Screen

A	B	Part Number	Description
3	4	2SVDTS03	Z-Vent DW Termination Screen 3 inch
4	4	2SVDTS04	Z-Vent DW Termination Screen 4 inch
5	4	2SVDTS05	Z-Vent DW Termination Screen 5 inch
6	4	2SVDTS06	Z-Vent DW Termination Screen 6 inch
7	4	2SVDTS07	Z-Vent DW Termination Screen 7 inch
8	4	2SVDTS08	Z-Vent DW Termination Screen 8 inch
9	4	2SVDTS09	Z-Vent DW Termination Screen 9 inch
10	4	2SVDTS10	Z-Vent DW Termination Screen 10 inch
12	4	2SVDTS12	Z-Vent DW Termination Screen 12 inch
14	4	2SVDTS14	Z-Vent DW Termination Screen 14 inch
16	4	2SVDTS16	Z-Vent DW Termination Screen 16 inch

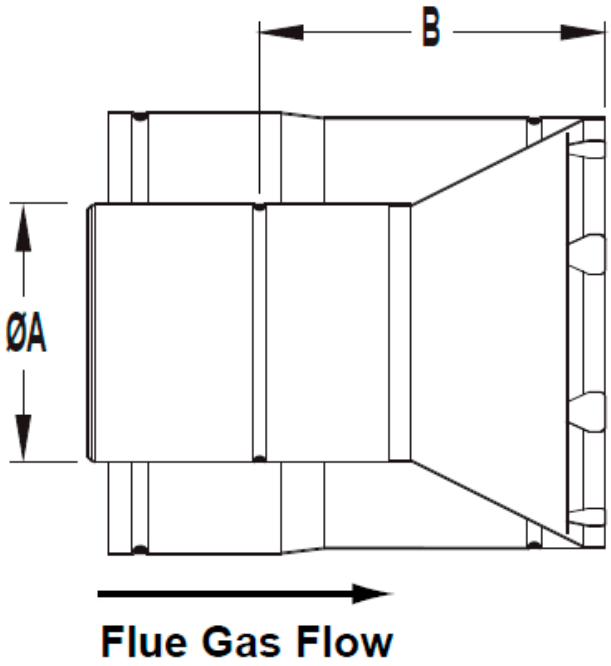

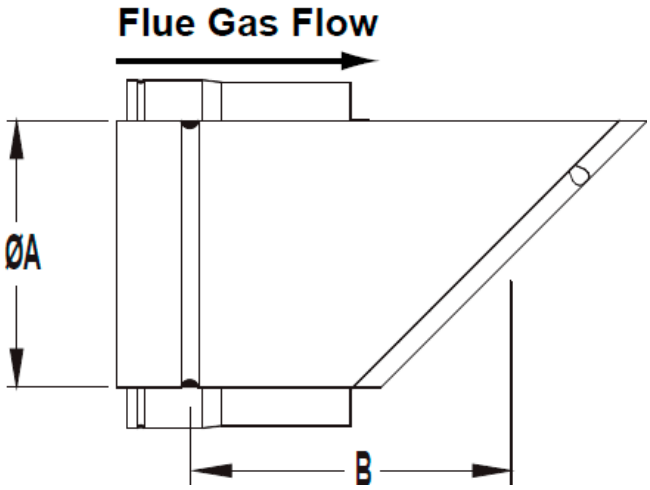

Double Wall 45° Angle Termination

A	B	Part Number	Description
6	8	2SVDAT06	Z-Vent DW Angle Termination 6 in
7	8.5	2SVDAT07	Z-Vent DW Angle Termination 7 in
8	9	2SVDAT08	Z-Vent DW Angle Termination 8 in
9	9.5	2SVDAT09	Z-Vent DW Angle Termination 9 in
10	10	2SVDAT10	Z-Vent DW Angle Termination 10 in
12	11	2SVDAT12	Z-Vent DW Angle Termination 12 in
14	12	2SVDAT14	Z-Vent DW Angle Termination 14 in
16	13	2SVDAT16	Z-Vent DW Angle Termination 16 in

Double Wall Termination Tee

A	B	C	Part Number	Description
6	6	5.5	2SVDTTX06	Z-Vent DW Termination Tee 6 in

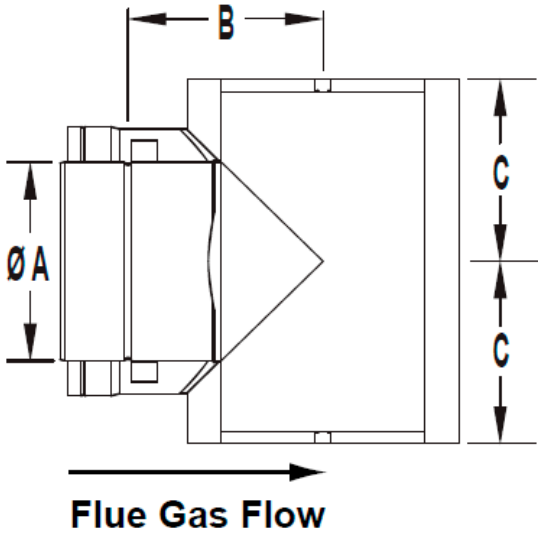

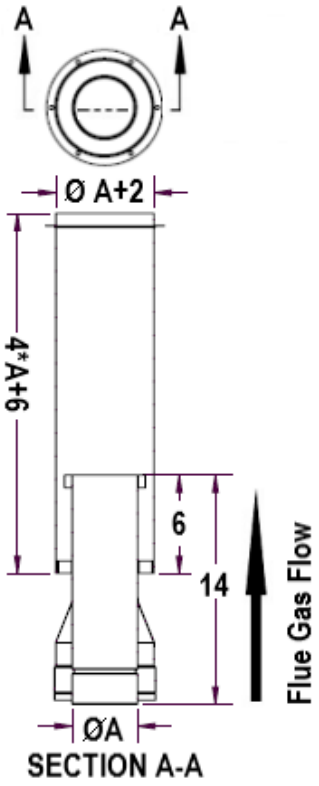

Double Wall Termination No Loss Stack

A	Part Number	Description
4	2SVDTNLS04	Z-Vent DW Termination No Loss Stack 4 in
5	2SVDTNLS05	Z-Vent DW Termination No Loss Stack 5 in

Z-VENT® DW Transition Adapters

DW Snap to DW ZV Clamp Adapter

A	B	C	Part Number	Description
3	6	11.04	2SVDI0306SV	Z-Vent DW Increaser 3Snap 6 ZVC
4	6	9.25	2SVDI0406SV	Z-Vent DW Increaser 4Snap 6 ZVC
4	7	11.04	2SVDI0407SV	Z-Vent DW Increaser 4Snap 7 ZVC
4	8	11.04	2SVDI0408SV	Z-Vent DW Increaser 4Snap 8 ZVC
5	6	9.25	2SVDI0506SV	Z-Vent DW Increaser 5Snap 6 ZVC
5	7	11.04	2SVDI0507SV	Z-Vent DW Increaser 5Snap 7 ZVC
5	8	11.04	2SVDI0508SV	Z-Vent DW Increaser 5Snap 8 ZVC
5	9	11.04	2SVDI0509SV	Z-Vent DW Increaser 5Snap 9 ZVC
5	10	11.04	2SVDI0510SV	Z-Vent DW Increaser 5Snap 10 ZVC

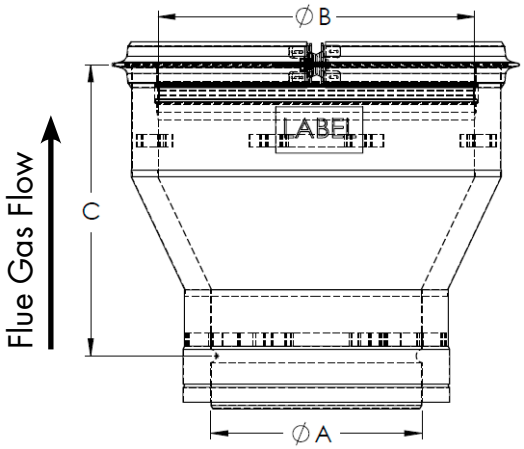

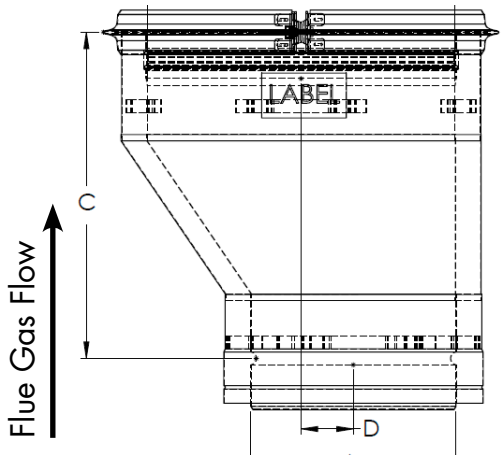

DW Snap to DW ZV Clamp Adapter

A	B	C	D	Part Number	Description
3	6	11.75	1.5	2SVDIE0306SV	Z-Vent DW Increaser Ecc 3Snap 6 ZVC
4	6	11.75	1	2SVDIE0406SV	Z-Vent DW Increaser Ecc 4Snap 6 ZVC
4	7	11.75	1.5	2SVDIE0407SV	Z-Vent DW Increaser Ecc 4Snap 7 ZVC
4	8	11.75	2	2SVDIE0408SV	Z-Vent DW Increaser Ecc 4Snap 8 ZVC
5	7	11.75	1	2SVDIE0507SV	Z-Vent DW Increaser Ecc 5Snap 7 ZVC
5	9	11.75	2	2SVDIE0509SV	Z-Vent DW Increaser Ecc 5Snap 9 ZVC
5	10	11.75	2.5	2SVDIE0510SV	Z-Vent DW Increaser Ecc 5Snap 10 ZVC

DW Snap to DW ZVClamp Adapter

A	B	C	D	E	Part Number	Description
6	3	4.58	8.75	9.71	2SVDL060345SV	Z-Vent DW Lateral 6 ZVC 3Snap Branch
6	4	4.91	9.25	9.62	2SVDL060445SV	Z-Vent DW Lateral 6 ZVC 4Snap Branch
7	4	4.91	9.5	10.33	2SVDL070445SV	Z-Vent DW Lateral 7 ZVC 4Snap Branch
7	5	5.44	10.25	10.95	2SVDL070545SV	Z-Vent DW Lateral 7 ZVC 5Snap Branch
8	4	5.12	9.75	11.74	2SVDL080445SV	Z-Vent DW Lateral 8 ZVC 4Snap Branch
9	5	5.45	10.25	12.36	2SVDL090545SV	Z-Vent DW Lateral 9 ZVC 5Snap Branch
10	5	5.76	11	14.13	2SVDL100545SV	Z-Vent DW Lateral 10 ZVC 5Snap Branch

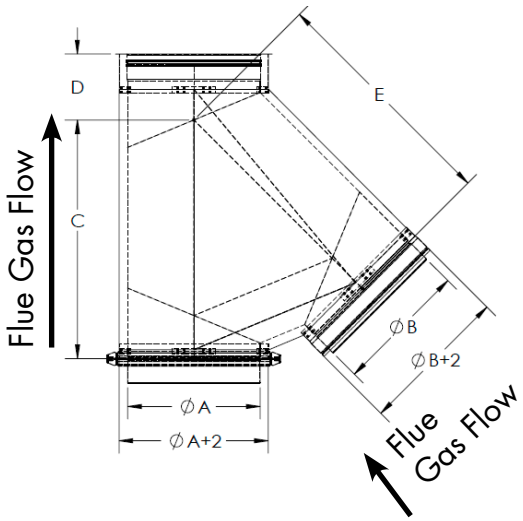

DW Snap to DW ZVClamp Adapter

A	B	C	D	E	Part Number	Description
6	3	4.58	8.75	7.5	2SVDTBT0603SV	Z-Vent DW Boot Tee 6 ZVC 3Snap Branch
6	4	4.91	9.25	7.5	2SVDTBT0604SV	Z-Vent DW Boot Tee 6 ZVC 4Snap Branch
7	4	4.91	9.5	8	2SVDTBT0704SV	Z-Vent DW Boot Tee 7 ZVC 4Snap Branch
7	5	5.44	10.25	8.5	2SVDTBT0705SV	Z-Vent DW Boot Tee 7 ZVC 5Snap Branch
8	4	5.12	9.75	9	2SVDTBT0804SV	Z-Vent DW Boot Tee 8 ZVC 4Snap Branch
9	5	5.45	10.25	9.5	2SVDTBT0905SV	Z-Vent DW Boot Tee 9 ZVC 5Snap Branch
10	5	5.76	11	10.75	2SVDTBT1005SV	Z-Vent DW Boot Tee 10 ZVC 5Snap Branch

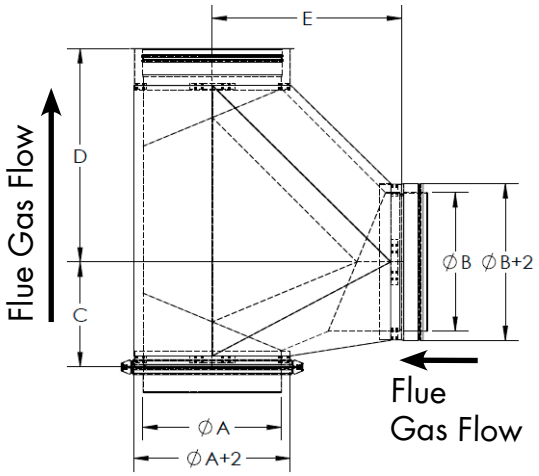

DW Snap to DW ZV Clamp Adapter

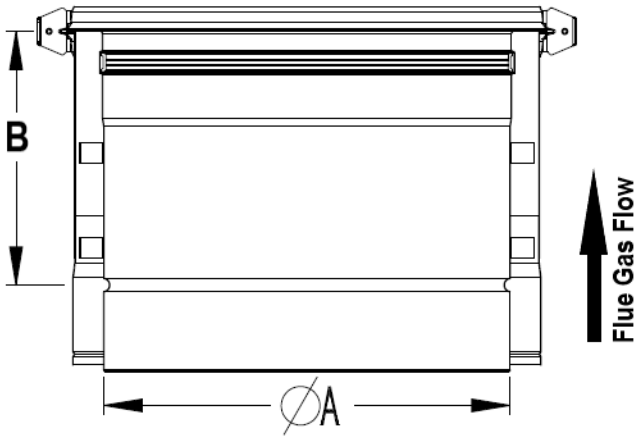

A	B	Part Number	Description
6	8.75	2SVDSV6	Z-Vent DW Snap to ZVC 6
7	8.75	2SVDSV7	Z-Vent DW Snap to ZVC 7
8	8.75	2SVDSV8	Z-Vent DW Snap to ZVC 8
9	8.75	2SVDSV9	Z-Vent DW Snap to ZVC 9
10	8.75	2SVDSV10	Z-Vent DW Snap to ZVC 10
12	8.75	2SVDSV12	Z-Vent DW Snap to ZVC 12
14	8.75	2SVDSV14	Z-Vent DW Snap to ZVC 14
16	8.75	2SVDSV16	Z-Vent DW Snap to ZVC 16
18	8.75	2SVDSV18	Z-Vent DW Snap to ZVC 18
20	8.75	2SVDSV20	Z-Vent DW Snap to ZVC 20
22	8.75	2SVDSV22	Z-Vent DW Snap to ZVC 22
24	8.75	2SVDSV24	Z-Vent DW Snap to ZVC 24

DW ZV Clamp to DW Snap Adapter

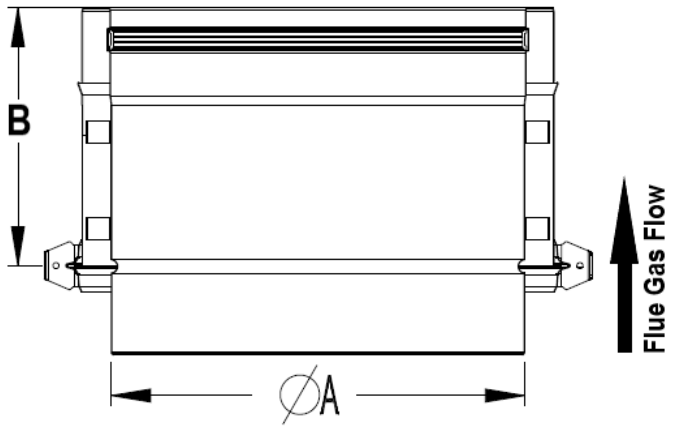

A	B	Part Number	Description
6	8.75	2SVDVS6	Z-Vent DW ZVC to Snap 6
7	8.75	2SVDVS7	Z-Vent DW ZVC to Snap 7
8	8.75	2SVDVS8	Z-Vent DW ZVC to Snap 8
9	8.75	2SVDVS9	Z-Vent DW ZVC to Snap 9
10	8.75	2SVDVS10	Z-Vent DW ZVC to Snap 10
12	8.75	2SVDVS12	Z-Vent DW ZVC to Snap 12
14	8.75	2SVDVS14	Z-Vent DW ZVC to Snap 14
16	8.75	2SVDVS16	Z-Vent DW ZVC to Snap 16
18	8.75	2SVDVS18	Z-Vent DW ZVC to Snap 18
20	8.75	2SVDVS20	Z-Vent DW ZVC to Snap 20
22	8.75	2SVDVS22	Z-Vent DW ZVC to Snap 22
24	8.75	2SVDVS24	Z-Vent DW ZVC to Snap 24

Z-VENT® Double Wall with ZV Clamp

ZV Clamp DW Concentric Increaser

A	B	C	Part Number	Description
6	7	7	2SVDI0607V	ZVC DW Increaser 6 to 7
6	8	8.15	2SVDI0608V	ZVC DW Increaser 6 to 8
6	9	9.2	2SVDI0609V	ZVC DW Increaser 6 to 9
6	10	10.3	2SVDI0610V	ZVC DW Increaser 6 to 10
6	12	11.5	2SVDI0612V	ZVC DW Increaser 6 to 12
7	8	7	2SVDI0708V	ZVC DW Increaser 7 to 8
7	9	8.15	2SVDI0709V	ZVC DW Increaser 7 to 9
7	10	9.2	2SVDI0710V	ZVC DW Increaser 7 to 10
7	12	11.36	2SVDI0712V	ZVC DW Increaser 7 to 12
8	10	9.54	2SVDI0810V	ZVC DW Increaser 8 to 10
8	12	10.3	2SVDI0812V	ZVC DW Increaser 8 to 12
8	14	12.43	2SVDI0814V	ZVC DW Increaser 8 to 14
9	10	7	2SVDI0910V	ZVC DW Increaser 9 to 10
9	12	9.2	2SVDI0912V	ZVC DW Increaser 9 to 12
10	12	8.15	2SVDI1012V	ZVC DW Increaser 10 to 12
10	14	11.3	2SVDI1014V	ZVC DW Increaser 10 to 14
10	16	13.43	2SVDI1016V	ZVC DW Increaser 10 to 16
12	14	9.15	2SVDI1214V	ZVC DW Increaser 12 to 14
12	16	11.3	2SVDI1216V	ZVC DW Increaser 12 to 16
12	18	13.43	2SVDI1218V	ZVC DW Increaser 12 to 18
12	20	14.75	2SVDI1220V	ZVC DW Increaser 12 to 20
14	16	9.15	2SVDI1416V	ZVC DW Increaser 14 to 16
14	18	11.3	2SVDI1418V	ZVC DW Increaser 14 to 18
14	20	13.43	2SVDI1420V	ZVC DW Increaser 14 to 20
16	18	9.15	2SVDI1618V	ZVC DW Increaser 16 to 18
16	20	11.3	2SVDI1620V	ZVC DW Increaser 16 to 20
16	22	13.43	2SVDI1622V	ZVC DW Increaser 16 to 22
18	20	9.15	2SVDI1820V	ZVC DW Increaser 18 to 20
18	22	11.3	2SVDI1822V	ZVC DW Increaser 18 to 22
18	24	13.43	2SVDI1824V	ZVC DW Increaser 18 to 24
20	22	9.15	2SVDI2022V	ZVC DW Increaser 20 to 22
20	24	11.3	2SVDI2024V	ZVC DW Increaser 20 to 24
22	24	9.15	2SVDI2224V	ZVC DW Increaser 22 to 24

Used to upsize a vent system. Recommended ONLY for use with vertical vent runs to ensure proper condensate drainage.

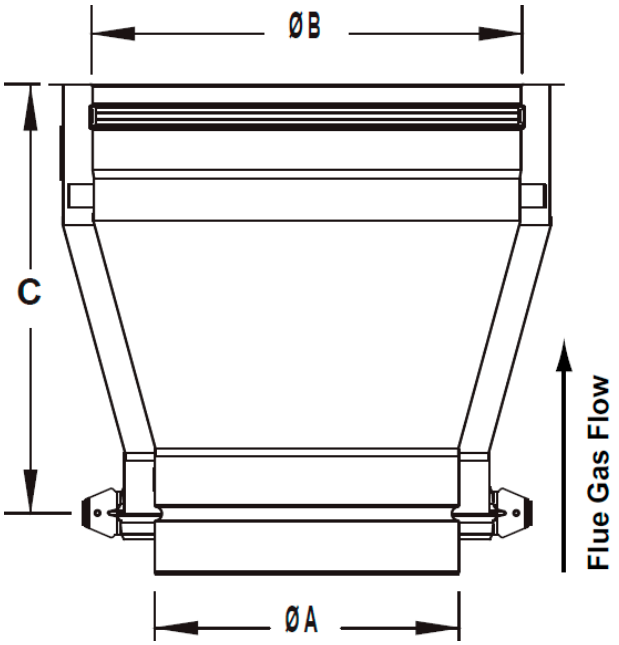

ZV Clamp DW Eccentric Increaser

A	B	C	D	Part Number	Description
6	7	12	0.5	2SVDIE0607V	ZVC DW Increaser Eccentric 6 to 7
6	8	12	1	2SVDIE0608V	ZVC DW Increaser Eccentric 6 to 8
6	9	12	1.5	2SVDIE0609V	ZVC DW Increaser Eccentric 6 to 9
6	10	14	2	2SVDIE0610V	ZVC DW Increaser Eccentric 6 to 10
6	12	14	3	2SVDIE0612V	ZVC DW Increaser Eccentric 6 to 12
7	8	12	0.5	2SVDIE0708V	ZVC DW Increaser Eccentric 7 to 8
7	10	12	1.5	2SVDIE0710V	ZVC DW Increaser Eccentric 7 to 10
7	12	14	2.5	2SVDIE0712V	ZVC DW Increaser Eccentric 7 to 12
8	10	12	1	2SVDIE0810V	ZVC DW Increaser Eccentric 8 to 10
8	12	12	2	2SVDIE0812V	ZVC DW Increaser Eccentric 8 to 12
8	14	14	3	2SVDIE0814V	ZVC DW Increaser Eccentric 8 to 14
9	10	12	0.5	2SVDIE0910V	ZVC DW Increaser Eccentric 9 to 10
9	12	12	1.5	2SVDIE0912V	ZVC DW Increaser Eccentric 9 to 12
10	12	14	1	2SVDIE1012V	ZVC DW Increaser Eccentric 10 to 12
10	14	15	2	2SVDIE1014V	ZVC DW Increaser Eccentric 10 to 14
10	16	15	3	2SVDIE1016V	ZVC DW Increaser Eccentric 10 to 16
12	14	15	1	2SVDIE1214V	ZVC DW Increaser Eccentric 12 to 14
12	16	15	2	2SVDIE1216V	ZVC DW Increaser Eccentric 12 to 16
12	18	15	3	2SVDIE1218V	ZVC DW Increaser Eccentric 12 to 18
12	20	15	4	2SVDIE1220V	ZVC DW Increaser Eccentric 12 to 20
14	16	16	1	2SVDIE1416V	ZVC DW Increaser Eccentric 14 to 16
14	18	16	2	2SVDIE1418V	ZVC DW Increaser Eccentric 14 to 18
14	20	17	3	2SVDIE1420V	ZVC DW Increaser Eccentric 14 to 20
16	18	15	1	2SVDIE1618V	ZVC DW Increaser Eccentric 16 to 18
16	20	15	2	2SVDIE1620V	ZVC DW Increaser Eccentric 16 to 20
16	22	15	3	2SVDIE1622V	ZVC DW Increaser Eccentric 16 to 22
18	20	15	1	2SVDIE1820V	ZVC DW Increaser Eccentric 18 to 20
18	22	16	2	2SVDIE1822V	ZVC DW Increaser Eccentric 18 to 22
18	24	16	3	2SVDIE1824V	ZVC DW Increaser Eccentric 18 to 24
20	22	15	1	2SVDIE2022V	ZVC DW Increaser Eccentric 20 to 22
20	24	15	2	2SVDIE2024V	ZVC DW Increaser Eccentric 20 to 24
22	24	15	1	2SVDIE2224V	ZVC DW Increaser Eccentric 22 to 24

Used to upsize a vent system.

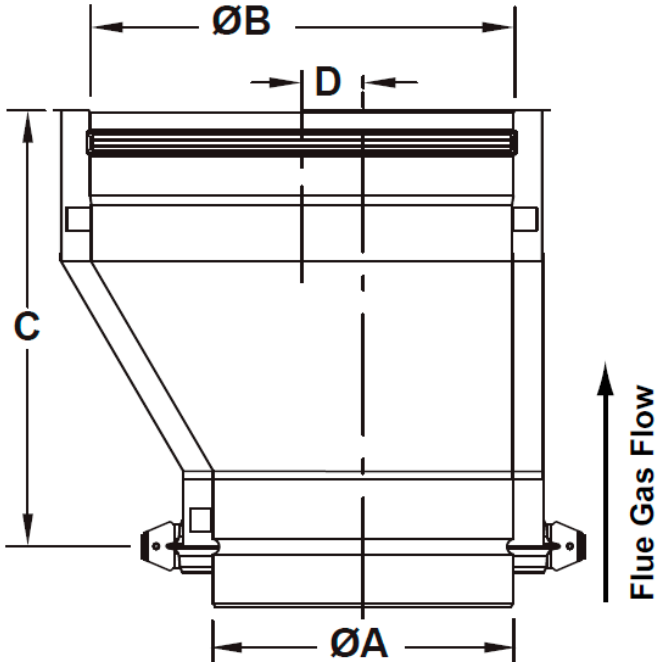

Z-VENT® Double Wall with ZV Clamp

ZV Clamp DW Lateral Wye

A	B	C	D	Part Number	Description
6	11.25	4.5	11.00	2SVDL0645V	ZVC DW Lateral 6 x 45° Wye
7	14.50	4.5	13.25	2SVDL0745V	ZVC DW Lateral 7 x 45° Wye
8	14.40	4.85	14.18	2SVDL0845V	ZVC DW Lateral 8 x 45° Wye
9	17.50	5	16.85	2SVDL0945V	ZVC DW Lateral 9 x 45° Wye
10	18.00	5.25	17.40	2SVDL1045V	ZVC DW Lateral 10 x 45° Wye
12	15.30	5.85	21.25	2SVDL1245V	ZVC DW Lateral 12 x 45° Wye
14	24.70	7	24.50	2SVDL1445V	ZVC DW Lateral 14 x 45° Wye
16	27.75	7.5	28.50	2SVDL1645V	ZVC DW Lateral 16 x 45° Wye
18	32.00	8	31.75	2SVDL1845V	ZVC DW Lateral 18 x 45° Wye
20	34.50	8.25	33.50	2SVDL2045V	ZVC DW Lateral 20 x 45° Wye
22	38.50	9	38.50	2SVDL2245V	ZVC DW Lateral 22 x 45° Wye
24	41.90	9.45	41.85	2SVDL2445V	ZVC DW Lateral 24 x 45° Wye

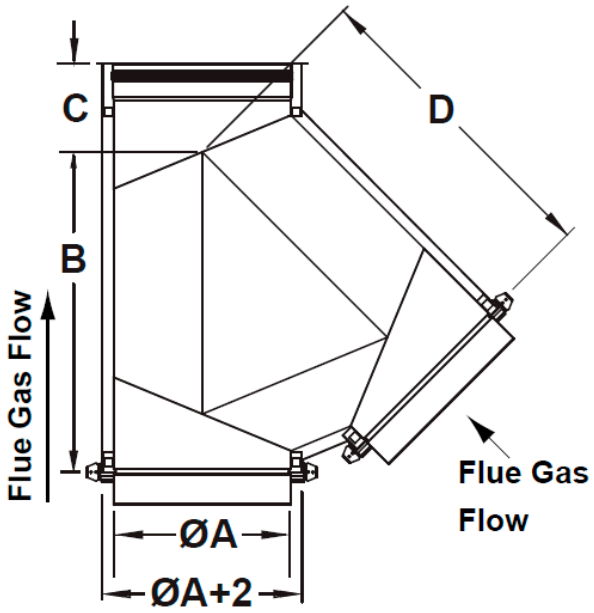

ZV Clamp DW Lateral Wye Reducing Branch

A	B	C	D	E	Part Number	Description
8	7	13.25	5	13.75	2SVDL080745V	ZVC DW Lateral 8 x 45° Wye 7 Branch
8	6	11.25	5	12.25	2SVDL080645V	ZVC DW Lateral 8 x 45° Wye 6 Branch
9	8	14.85	5.15	15.40	2SVDL090845V	ZVC DW Lateral 9 x 45° Wye 8 Branch
9	7	13.10	5.15	14.00	2SVDL090745V	ZVC DW Lateral 9 x 45° Wye 7 Branch
9	6	11.20	5.15	12.45	2SVDL090645V	ZVC DW Lateral 9 x 45° Wye 6 Branch
10	9	16.65	5.35	17.00	2SVDL100945V	ZVC DW Lateral 10 x 45° Wye 9 Branch
10	8	14.65	5.35	15.50	2SVDL100845V	ZVC DW Lateral 10 x 45° Wye 8 Branch
10	7	12.90	5.35	14.15	2SVDL100745V	ZVC DW Lateral 10 x 45° Wye 7 Branch
10	6	11.00	5.35	12.65	2SVDL100645V	ZVC DW Lateral 10 x 45° Wye 6 Branch
12	10	18.10	5.75	19.00	2SVDL121045V	ZVC DW Lateral 12 x 45° Wye 10 Branch
12	9	16.25	5.75	17.50	2SVDL120945V	ZVC DW Lateral 12 x 45° Wye 9 Branch
12	8	14.40	5.75	16.00	2SVDL120845V	ZVC DW Lateral 12 x 45° Wye 8 Branch
12	7	12.50	5.75	14.50	2SVDL120745V	ZVC DW Lateral 12 x 45° Wye 7 Branch
12	6	12.75	5.75	15.25	2SVDL120645V	ZVC DW Lateral 12 x 45° Wye 6 Branch
14	12	21.50	7.15	22.35	2SVDL141245V	ZVC DW Lateral 14 x 45° Wye 12 Branch
14	10	17.75	7.15	19.40	2SVDL141045V	ZVC DW Lateral 14 x 45° Wye 10 Branch
14	9	15.85	7.15	18.00	2SVDL140945V	ZVC DW Lateral 14 x 45° Wye 9 Branch
14	8	14.00	7.15	16.45	2SVDL140845V	ZVC DW Lateral 14 x 45° Wye 8 Branch
14	7	14.55	7.15	17.45	2SVDL140745V	ZVC DW Lateral 14 x 45° Wye 7 Branch
14	6	14.35	7.15	17.75	2SVDL140645V	ZVC DW Lateral 14 x 45° Wye 6 Branch
16	14	24.90	7.55	25.75	2SVDL161445V	ZVC DW Lateral 16 x 45° Wye 14 Branch
16	12	21.10	7.55	22.75	2SVDL161245V	ZVC DW Lateral 16 x 45° Wye 12 Branch
16	10	17.35	7.55	19.80	2SVDL161045V	ZVC DW Lateral 16 x 45° Wye 10 Branch
16	9	15.45	7.55	18.35	2SVDL160945V	ZVC DW Lateral 16 x 45° Wye 9 Branch
16	8	16.40	7.55	19.65	2SVDL160845V	ZVC DW Lateral 16 x 45° Wye 8 Branch
16	7	14.15	7.55	17.85	2SVDL160745V	ZVC DW Lateral 16 x 45° Wye 7 Branch
18	16	28.25	8	29.00	2SVDL181645V	ZVC DW Lateral 18 x 45° Wye 16 Branch
18	14	24.45	8	26.15	2SVDL181445V	ZVC DW Lateral 18 x 45° Wye 14 Branch
18	12	20.65	8	23.15	2SVDL181245V	ZVC DW Lateral 18 x 45° Wye 12 Branch
18	10	16.90	8	20.25	2SVDL181045V	ZVC DW Lateral 18 x 45° Wye 10 Branch
18	9	18.15	8	21.95	2SVDL180945V	ZVC DW Lateral 18 x 45° Wye 9 Branch
18	8	15.95	8	20.10	2SVDL180845V	ZVC DW Lateral 18 x 45° Wye 8 Branch
18	7	16.15	8	20.75	2SVDL180745V	ZVC DW Lateral 18 x 45° Wye 7 Branch
20	18	31.60	8.4	32.45	2SVDL201845V	ZVC DW Lateral 20 x 45° Wye 18 Branch
20	16	27.85	8.4	29.50	2SVDL201645V	ZVC DW Lateral 20 x 45° Wye 16 Branch
20	14	24.05	8.4	26.55	2SVDL201445V	ZVC DW Lateral 20 x 45° Wye 14 Branch

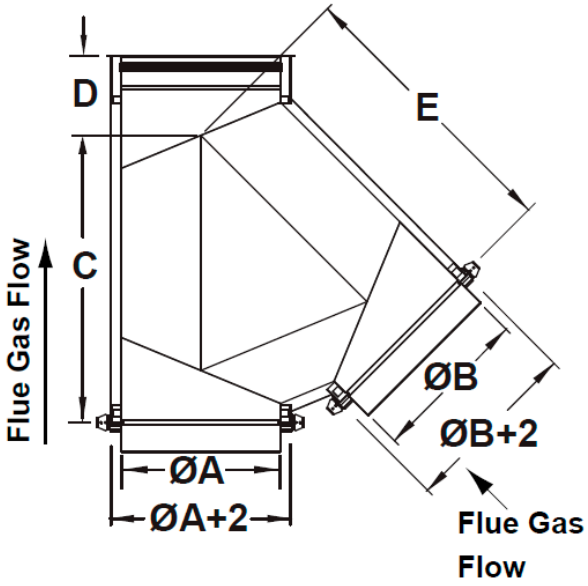

Z-VENT® Double Wall with ZV Clamp

ZV Clamp DW Lateral Wye Branch

A	B	C	D	E	Part Number	Description
20	12	20.25	8.4	23.60	2SVDL201245V	ZVC DW Lateral 20 x 45° Wye 12 Branch
20	10	16.50	8.4	20.65	2SVDL201045V	ZVC DW Lateral 20 x 45° Wye 10 Branch
20	9	17.78	8.4	22.35	2SVDL200945V	ZVC DW Lateral 20 x 45° Wye 9 Branch
20	8	18.35	8.4	23.35	2SVDL200845V	ZVC DW Lateral 20 x 45° Wye 8 Branch
22	20	34.95	8.8	35.80	2SVDL222045V	ZVC DW Lateral 22 x 45° Wye 20 Branch
22	18	31.20	8.8	32.85	2SVDL221845V	ZVC DW Lateral 22 x 45° Wye 18 Branch
22	16	27.45	8.8	29.90	2SVDL221645V	ZVC DW Lateral 22 x 45° Wye 16 Branch
22	14	23.65	8.8	26.95	2SVDL221445V	ZVC DW Lateral 22 x 45° Wye 14 Branch
22	12	19.85	8.8	24.00	2SVDL221245V	ZVC DW Lateral 22 x 45° Wye 12 Branch
22	10	19.65	8.8	24.60	2SVDL221045V	ZVC DW Lateral 22 x 45° Wye 10 Branch
22	9	20.57	8.8	25.95	2SVDL220945V	ZVC DW Lateral 22 x 45° Wye 9 Branch
22	8	17.95	8.8	23.75	2SVDL220845V	ZVC DW Lateral 22 x 45° Wye 8 Branch
24	22	38.31	9.25	39.15	2SVDL242245V	ZVC DW Lateral 24 x 45° Wye 22 Branch
24	20	34.50	9.25	36.20	2SVDL242045V	ZVC DW Lateral 24 x 45° Wye 20 Branch
24	18	30.75	9.25	33.25	2SVDL241845V	ZVC DW Lateral 24 x 45° Wye 18 Branch
24	16	27.00	9.25	30.30	2SVDL241645V	ZVC DW Lateral 24 x 45° Wye 16 Branch
24	14	23.20	9.25	27.35	2SVDL241445V	ZVC DW Lateral 24 x 45° Wye 14 Branch
24	12	19.40	9.25	24.40	2SVDL241245V	ZVC DW Lateral 24 x 45° Wye 12 Branch
24	10	19.20	9.25	25.00	2SVDL241045V	ZVC DW Lateral 24 x 45° Wye 10 Branch

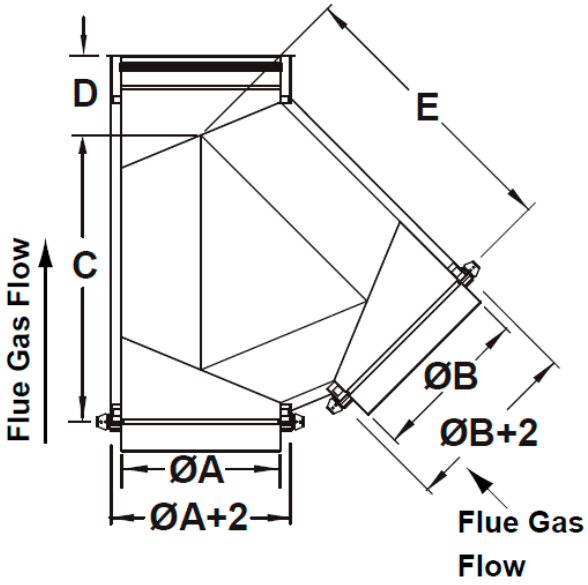

ZV Clamp DW Tee

A	B	C	D	Part Number	Description
6	5.25	7.25	5	2SVDT06V	ZVC DW Tee 6
7	5.70	7.8	5.5	2SVDT07V	ZVC DW Tee 7
8	6.38	8.375	6	2SVDT08V	ZVC DW Tee 8
9	6.88	8.875	6.5	2SVDT09V	ZVC DW Tee 9
10	7.63	9.625	8	2SVDT10V	ZVC DW Tee 10
12	8.63	10.625	9	2SVDT12V	ZVC DW Tee 12
14	8.63	11.625	11	2SVDT14V	ZVC DW Tee 14
16	11	13.75	12.75	2SVDT16V	ZVC DW Tee 16
18	11	14.25	13.5	2SVDT18V	ZVC DW Tee 18
20	12	15.25	14.25	2SVDT20V	ZVC DW Tee 20
22	12.75	16.25	15.5	2SVDT22V	ZVC DW Tee 22
24	13.75	17.25	16.25	2SVDT24V	ZVC DW Tee 24

A tee is used to connect horizontal and vertical vent sections. Tee cap sold separately.

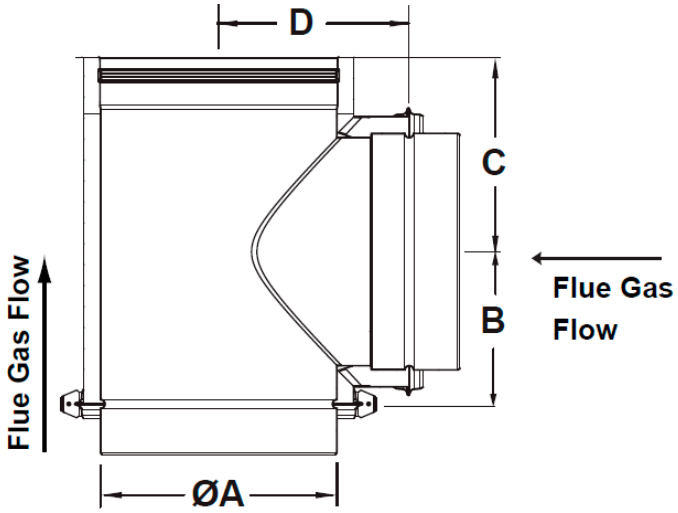

A Boot Tee is designed to allow a low flow resistance connection of horizontal and vertical sections. A tee cap is sold separately,

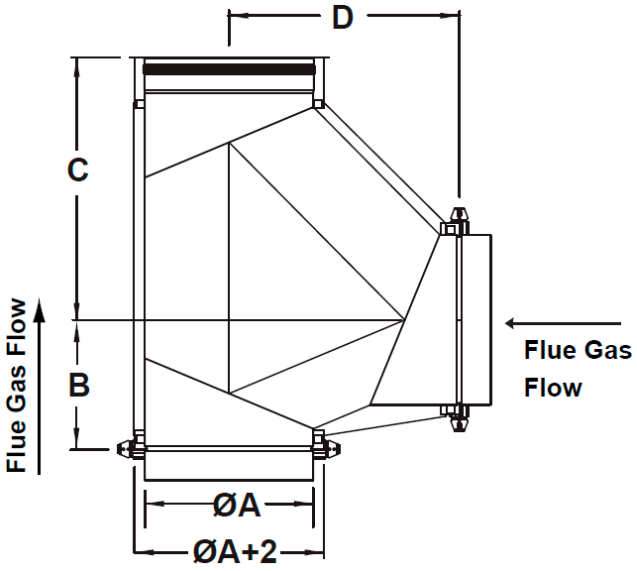

ZV Clamp DW Boot Tee

A	B	C	D	Part Number	Description
6	5.75	11.25	10	2SVDTBT06V	ZVC DW Boot Tee 6
7	7.25	12.25	10.75	2SVDTBT07V	ZVC DW Boot Tee 7
8	6.75	13.5	12	2SVDTBT08V	ZVC DW Boot Tee 8
9	8.75	14.75	13.25	2SVDTBT09V	ZVC DW Boot Tee 9
10	9.00	16	14.5	2SVDTBT10V	ZVC DW Boot Tee 10
12	10.25	18.5	17	2SVDTBT12V	ZVC DW Boot Tee 12
14	10.00	22	19.25	2SVDTBT14V	ZVC DW Boot Tee 14
16	11.25	24	21.25	2SVDTBT16V	ZVC DW Boot Tee 16
18	14.25	26.5	23.75	2SVDTBT18V	ZVC DW Boot Tee 18
20	14.00	29.5	26	2SVDTBT20V	ZVC DW Boot Tee 20
22	14.75	30	27	2SVDTBT22V	ZVC DW Boot Tee 22
24	20.75	32	29.5	2SVDTBT24V	ZVC DW Boot Tee 24

Z-VENT® Double Wall with ZV Clamp

ZV Clamp DW Boot Tee Reducing Branch

A	B	C	D	E	Part Number	Description
8	7	6.00	12	11	2SVDTBT0807V	ZVC DW Boot Tee 8 x 7 Branch
8	6	5.75	10.50	10	2SVDTBT0806V	ZVC DW Boot Tee 8 x 6 Branch
9	8	6.25	13.25	12	2SVDTBT0908V	ZVC DW Boot Tee 9 x 8 Branch
9	7	6.50	12.25	11.75	2SVDTBT0907V	ZVC DW Boot Tee 9 x 7 Branch
9	6	5.50	11	11	2SVDTBT0906V	ZVC DW Boot Tee 9 x 6 Branch
10	9	7.50	14.75	13.50	2SVDTBT1009V	ZVC DW Boot Tee 10 x 9 Branch
10	8	7.00	13.5	12.75	2SVDTBT1008V	ZVC DW Boot Tee 10 x 8 Branch
10	7	6.25	12.25	12	2SVDTBT1007V	ZVC DW Boot Tee 10 x 7 Branch
10	6	5.50	11	11.25	2SVDTBT1006V	ZVC DW Boot Tee 10 x 6 Branch
12	10	8.00	16	15.25	2SVDTBT1210V	ZVC DW Boot Tee 12 x 10 Branch
12	9	7.50	14.75	14.50	2SVDTBT1209V	ZVC DW Boot Tee 12 x 9 Branch
12	8	7.00	13.50	13.75	2SVDTBT1208V	ZVC DW Boot Tee 12 x 8 Branch
12	7	6.25	12.25	13	2SVDTBT1207V	ZVC DW Boot Tee 12 x 7 Branch
12	6	6.25	12.50	13.75	2SVDTBT1206V	ZVC DW Boot Tee 12 x 6 Branch
14	12	9.25	19.25	17.50	2SVDTBT1412V	ZVC DW Boot Tee 14 x 12 Branch
14	10	7.75	16.75	16.25	2SVDTBT1410V	ZVC DW Boot Tee 14 x 10 Branch
14	9	7.25	15.50	15.50	2SVDTBT1409V	ZVC DW Boot Tee 14 x 9 Branch
14	8	6.25	14.25	14.75	2SVDTBT1408V	ZVC DW Boot Tee 14 x 8 Branch
14	7	6.75	14.75	15.75	2SVDTBT1407V	ZVC DW Boot Tee 14 x 7 Branch
14	6	6.25	14.75	16.25	2SVDTBT1406V	ZVC DW Boot Tee 14 x 6 Branch
16	14	10.00	21.50	20	2SVDTBT1614V	ZVC DW Boot Tee 16 x 14 Branch
16	12	9.00	19	19.50	2SVDTBT1612V	ZVC DW Boot Tee 16 x 12 Branch
16	10	7.50	16.50	17.25	2SVDTBT1610V	ZVC DW Boot Tee 16 x 10 Branch
16	9	8.00	17.50	18.75	2SVDTBT1609V	ZVC DW Boot Tee 16 x 9 Branch
16	8	7.25	16	17.75	2SVDTBT1608V	ZVC DW Boot Tee 16 x 8 Branch
16	7	6.50	14.50	16.75	2SVDTBT1607V	ZVC DW Boot Tee 16 x 7 Branch
18	16	11.45	24	22.50	2SVDTBT1816V	ZVC DW Boot Tee 18 x 16 Branch
18	14	10.25	21.50	21	2SVDTBT1814V	ZVC DW Boot Tee 18 x 14 Branch
18	12	9.00	19	19.75	2SVDTBT1812V	ZVC DW Boot Tee 18 x 12 Branch

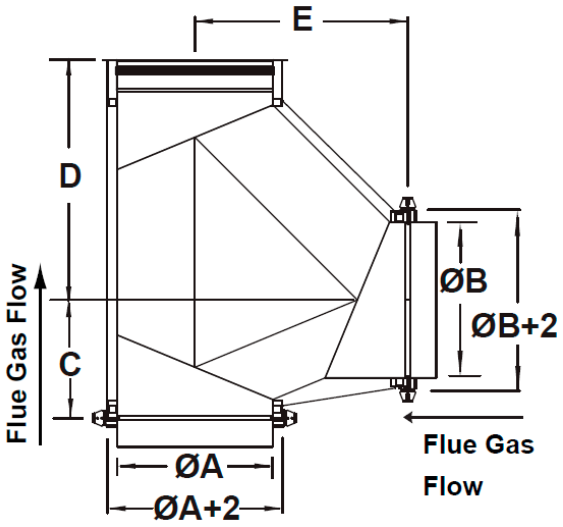

ZV Clamp DW Boot Tee Reducing Branch

A	B	C	D	E	Part Number	Description
18	10	7.65	16.50	18.25	2SVDTBT1810V	ZVC DW Boot Tee 18 x 10 Branch
18	9	7.95	17.50	19.75	2SVDTBT1809V	ZVC DW Boot Tee 18 x 9 Branch
18	8	7.25	16	18.75	2SVDTBT1808V	ZVC DW Boot Tee 18 x 8 Branch
18	7	2.50	15.75	9.75	2SVDTBT1807V	ZVC DW Boot Tee 18 x 7 Branch
20	18	12.75	26.50	25	2SVDTBT2018V	ZVC DW Boot Tee 20 x 18 Branch
20	16	11.45	24	23.50	2SVDTBT2016V	ZVC DW Boot Tee 20 x 16 Branch
20	14	10.25	21.50	22	2SVDTBT2014V	ZVC DW Boot Tee 20 x 14 Branch
20	12	9.00	19	20.75	2SVDTBT2012V	ZVC DW Boot Tee 20 x 12 Branch
20	10	8.50	19	21.75	2SVDTBT2010V	ZVC DW Boot Tee 20 x 10 Branch
20	9	7.95	17.50	20.75	2SVDTBT2009V	ZVC DW Boot Tee 20 x 9 Branch
20	8	8.00	18	21.75	2SVDTBT2008V	ZVC DW Boot Tee 20 x 8 Branch
22	20	14.00	29	27.50	2SVDTBT2220V	ZVC DW Boot Tee 22 x 20 Branch
22	18	12.75	26.50	26	2SVDTBT2218V	ZVC DW Boot Tee 22 x 18 Branch
22	16	11.45	24	24.50	2SVDTBT2216V	ZVC DW Boot Tee 22 x 16 Branch
22	14	10.20	21.50	23	2SVDTBT2214V	ZVC DW Boot Tee 22 x 14 Branch
22	12	10.00	19	21.75	2SVDTBT2212V	ZVC DW Boot Tee 22 x 12 Branch
22	10	8.50	19	22.75	2SVDTBT2210V	ZVC DW Boot Tee 22 x 10 Branch
22	9	8.75	19.50	23.75	2SVDTBT2209V	ZVC DW Boot Tee 22 x 9 Branch
22	8	8.85	20	24.75	2SVDTBT2208V	ZVC DW Boot Tee 22 x 8 Branch
24	22	15.35	31.50	30	2SVDTBT2422V	ZVC DW Boot Tee 24 x 22 Branch
24	20	14.00	29	28.50	2SVDTBT2420V	ZVC DW Boot Tee 24 x 20 Branch
24	18	12.75	26.50	27	2SVDTBT2418V	ZVC DW Boot Tee 24 x 18 Branch
24	16	11.45	24	25.50	2SVDTBT2416V	ZVC DW Boot Tee 24 x 16 Branch
24	14	10.25	21.50	24	2SVDTBT2414V	ZVC DW Boot Tee 24 x 14 Branch
24	12	9.00	19	22.75	2SVDTBT2412V	ZVC DW Boot Tee 24 x 12 Branch
24	10	8.75	19	23.75	2SVDTBT2410V	ZVC DW Boot Tee 24 x 10 Branch

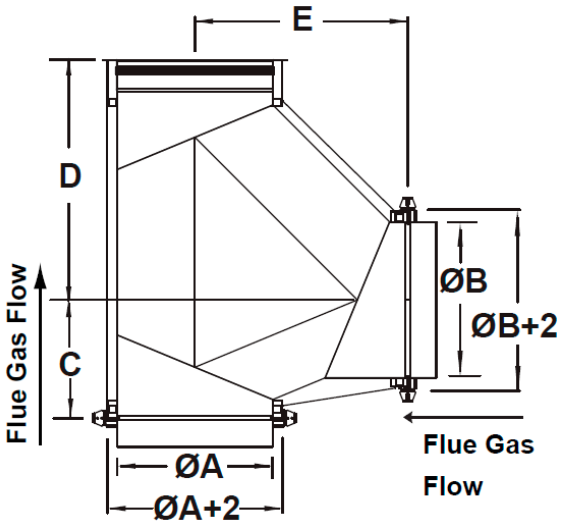

Z-VENT® Double Wall with ZV Clamp

ZV Clamp DW Tee Cap

A	B	Part Number	Description
6	2	2SVDTC06V	ZVC DW Tee Cap 6
7	2	2SVDTC07V	ZVC DW Tee Cap 7
8	2	2SVDTC08V	ZVC DW Tee Cap 8
9	2	2SVDTC09V	ZVC DW Tee Cap 9
10	2	2SVDTC10V	ZVC DW Tee Cap 10
12	2	2SVDTC12V	ZVC DW Tee Cap 12
14	2	2SVDTC14V	ZVC DW Tee Cap 14
16	2	2SVDTC16V	ZVC DW Tee Cap 16
18	2	2SVDTC18V	ZVC DW Tee Cap 18
20	2	2SVDTC20V	ZVC DW Tee Cap 20
22	2	2SVDTC22V	ZVC DW Tee Cap 22
24	2	2SVDTC24V	ZVC DW Tee Cap 24

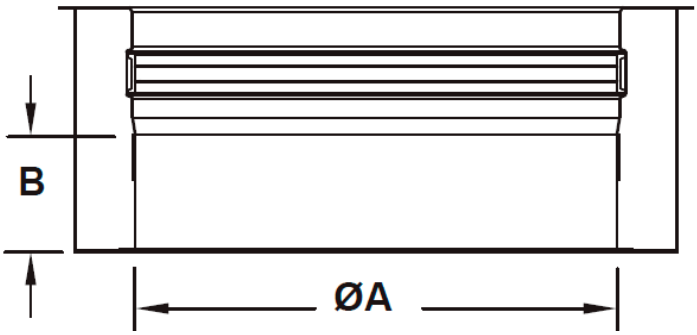

A tee cap with drain is required at the bottom of a vertical stack. High tempeature silicone tubing is available separately,

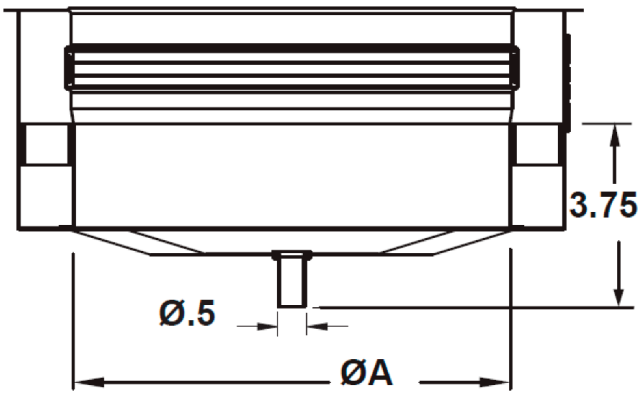

ZV Clamp DW Tee Cap Drain

A	Part Number	Description
6	2SVDTCD06V	ZVC DW Tee Cap Drain 6
7	2SVDTCD07V	ZVC DW Tee Cap Drain 7
8	2SVDTCD08V	ZVC DW Tee Cap Drain 8
9	2SVDTCD09V	ZVC DW Tee Cap Drain 9
10	2SVDTCD10V	ZVC DW Tee Cap Drain 10
12	2SVDTCD12V	ZVC DW Tee Cap Drain 12
14	2SVDTCD14V	ZVC DW Tee Cap Drain 14
16	2SVDTCD16V	ZVC DW Tee Cap Drain 16
18	2SVDTCD18V	ZVC DW Tee Cap Drain 18
20	2SVDTCD20V	ZVC DW Tee Cap Drain 20
22	2SVDTCD22V	ZVC DW Tee Cap Drain 22
24	2SVDTCD24V	ZVC DW Tee Cap Drain 24

ZV Clamp DW End Cap w/.5 Drain

A	B	C	Part Number	Description
6	8	5.6	2SVDECD06V	ZVC DW End Cap Drain 6
7	9	5.85	2SVDECD07V	ZVC DW End Cap Drain 7
8	10	6.1	2SVDECD08V	ZVC DW End Cap Drain 8
9	11	6.62	2SVDECD09V	ZVC DW End Cap Drain 9
10	12	6.62	2SVDECD10V	ZVC DW End Cap Drain 10
12	14	6	2SVDECD12V	ZVC DW End Cap Drain 12
14	16	6	2SVDECD14V	ZVC DW End Cap Drain 14
16	18	6	2SVDECD16V	ZVC DW End Cap Drain 16
18	20	6	2SVDECD18V	ZVC DW End Cap Drain 18
20	22	6	2SVDECD20V	ZVC DW End Cap Drain 20
22	24	6	2SVDECD22V	ZVC DW End Cap Drain 22
24	26	6	2SVDECD24V	ZVC DW End Cap Drain 24

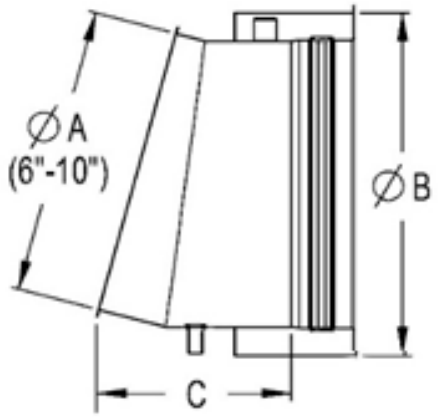

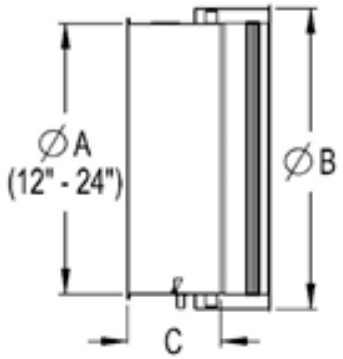

Used to drain condensate from the vent system.
High temperature drain tube kit sold separately.

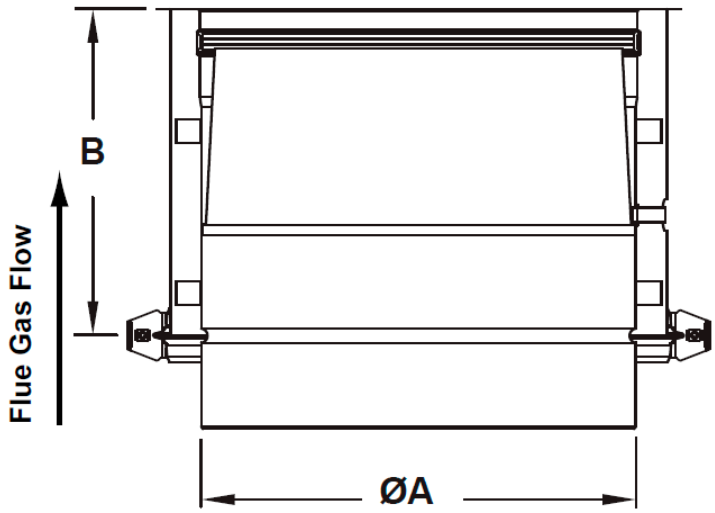

ZV Clamp DW Vertical/Horizontal Drain Pipe w/.5" Drain

A	B	Part Number	Description
6	5.75	2SVDVDP06V	ZVC DW Drain Pipe 6
7	5.75	2SVDVDP07V	ZVC DW Drain Pipe 7
8	5.75	2SVDVDP08V	ZVC DW Drain Pipe 8
9	7.75	2SVDVDP09V	ZVC DW Drain Pipe 9
10	7.75	2SVDVDP10V	ZVC DW Drain Pipe 10
12	5.75	2SVDVDP12V	ZVC DW Drain Pipe 12
14	6.75	2SVDVDP14V	ZVC DW Drain Pipe 14
16	8.75	2SVDVDP16V	ZVC DW Drain Pipe 16
18	8.75	2SVDVDP18V	ZVC DW Drain Pipe 18
20	9.75	2SVDVDP20V	ZVC DW Drain Pipe 20
22	9.75	2SVDVDP22V	ZVC DW Drain Pipe 22
24	11	2SVDVDP24V	ZVC DW Drain Pipe 24

Z-VENT® Double Wall with ZV Clamp

ZV Clamp DW Inline Damper

A	B	Part Number	Description
6	9.75	2SVDID06V	ZVC DW Fixed Blade Damper 6
7	9.75	2SVDID07V	ZVC DW Fixed Blade Damper 7
8	9.75	2SVDID08V	ZVC DW Fixed Blade Damper 8
9	9.75	2SVDID09V	ZVC DW Fixed Blade Damper 9
10	9.75	2SVDID10V	ZVC DW Fixed Blade Damper 10
12	9.75	2SVDID12V	ZVC DW Fixed Blade Damper 12
14	10.75	2SVDID14V	ZVC DW Fixed Blade Damper 14
16	10.75	2SVDID16V	ZVC DW Fixed Blade Damper 16
18	10.75	2SVDID18V	ZVC DW Fixed Blade Damper 18
20	10.75	2SVDID20V	ZVC DW Fixed Blade Damper 20
22	10.75	2SVDID22V	ZVC DW Fixed Blade Damper 22
24	10.75	2SVDID24V	ZVC DW Fixed Blade Damper 24

Used to adjust flue gas flow in positive or negative pressure vent systems. Comes with heavy duty locking ⅜" regulator set and extended shaft. Remove outer double wall jacket for use on single wall vent.

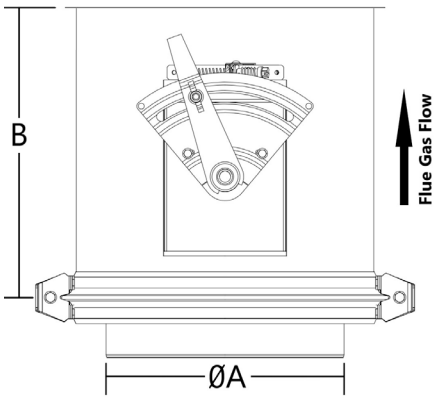

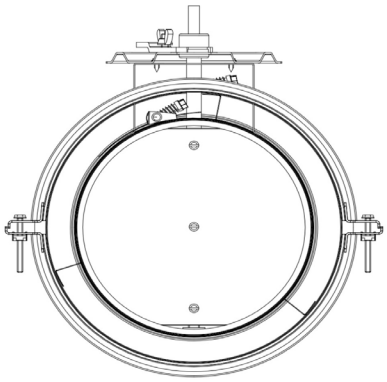

ZV Clamp DW Pipe

A	B	Part Number	Description
6	3.75	2SVDP06.5V	ZVC DW Pipe 6 x 6L
6	9.75	2SVDP0601V	ZVC DW Pipe 6 x 12L
6	15.75	2SVDP0601.5V	ZVC DW Pipe 6 x 18L
6	21.75	2SVDP0602V	ZVC DW Pipe 6 x 24L
6	33.75	2SVDP0603V	ZVC DW Pipe 6 x 36L
6	45.75	2SVDP0604V	ZVC DW Pipe 6 x 48L
7	3.75	2SVDP07.5V	ZVC DW Pipe 7 x 6L
7	9.75	2SVDP0701V	ZVC DW Pipe 7 x 12L
7	15.75	2SVDP0701.5V	ZVC DW Pipe 7 x 18L
7	21.75	2SVDP0702V	ZVC DW Pipe 7 x 24L
7	33.75	2SVDP0703V	ZVC DW Pipe 7 x 36L
7	45.75	2SVDP0704V	ZVC DW Pipe 7 x 48L
8	3.75	2SVDP08.5V	ZVC DW Pipe 8 x 6L
8	9.75	2SVDP0801V	ZVC DW Pipe 8 x 12L
8	15.75	2SVDP0801.5V	ZVC DW Pipe 8 x 18L
8	21.75	2SVDP0802V	ZVC DW Pipe 8 x 24L
8	33.75	2SVDP0803V	ZVC DW Pipe 8 x 36L
8	45.75	2SVDP0804V	ZVC DW Pipe 8 x 48L
9	3.75	2SVDP09.5V	ZVC DW Pipe 9 x 6L
9	9.75	2SVDP0901V	ZVC DW Pipe 9 x 12L
9	15.75	2SVDP0901.5V	ZVC DW Pipe 9 x 18L
9	21.75	2SVDP0902V	ZVC DW Pipe 9 x 24L
9	33.75	2SVDP0903V	ZVC DW Pipe 9 x 36L
10	3.75	2SVDP10.5V	ZVC DW Pipe 10 x 6L
10	9.75	2SVDP1001V	ZVC DW Pipe 10 x 12L
10	15.75	2SVDP1001.5V	ZVC DW Pipe 10 x 18L
10	21.75	2SVDP1002V	ZVC DW Pipe 10 x 24L
10	33.75	2SVDP1003V	ZVC DW Pipe 10 x 36L
12	3.75	2SVDP12.5V	ZVC DW Pipe 12 x 6L
12	9.75	2SVDP1201V	ZVC DW Pipe 12 x 12L
12	15.75	2SVDP1201.5V	ZVC DW Pipe 12 x 18L
12	21.75	2SVDP1202V	ZVC DW Pipe 12 x 24L
12	33.75	2SVDP1203V	ZVC DW Pipe 12 x 36L
14	5.75	2SVDP14.5V	ZVC DW Pipe 14 x 6L
14	8.75	2SVDP1401V	ZVC DW Pipe 14 x 12L
14	14.75	2SVDP1401.5V	ZVC DW Pipe 14 x 18L
14	20.75	2SVDP1402V	ZVC DW Pipe 14 x 24L
14	32.75	2SVDP1403V	ZVC DW Pipe 14 x 36L
16	5.75	2SVDP16.5V	ZVC DW Pipe 16 x 6L
16	8.75	2SVDP1601V	ZVC DW Pipe 16 x 12L
16	14.75	2SVDP1601.5V	ZVC DW Pipe 16 x 18L
16	20.75	2SVDP1602V	ZVC DW Pipe 16 x 24L
16	32.75	2SVDP1603V	ZVC DW Pipe 16 x 36L
18	5.75	2SVDP18.5V	ZVC DW Pipe 18 x 6L
18	8.75	2SVDP1801V	ZVC DW Pipe 18 x 12L
18	14.75	2SVDP1801.5V	ZVC DW Pipe 18 x 18L
18	20.75	2SVDP1802V	ZVC DW Pipe 18 x 24L
18	32.75	2SVDP1803V	ZVC DW Pipe 18 x 36L
20	5.75	2SVDP20.5V	ZVC DW Pipe 20 x 6L
20	8.75	2SVDP2001V	ZVC DW Pipe 20 x 12L
20	14.75	2SVDP2001.5V	ZVC DW Pipe 20 x 18L
20	20.75	2SVDP2002V	ZVC DW Pipe 20 x 24L
20	32.75	2SVDP2003V	ZVC DW Pipe 20 x 36L
22	5.75	2SVDP22.5V	ZVC DW Pipe 22 x 6L
22	8.75	2SVDP2201V	ZVC DW Pipe 22 x 12L
22	14.75	2SVDP2201.5V	ZVC DW Pipe 22 x 18L
22	20.75	2SVDP2202V	ZVC DW Pipe 22 x 24L
22	32.75	2SVDP2203V	ZVC DW Pipe 22 x 36L
24	5.75	2SVDP24.5V	ZVC DW Pipe 24 x 6L
24	8.75	2SVDP2401V	ZVC DW Pipe 24 x 12L
24	14.75	2SVDP2401.5V	ZVC DW Pipe 24 x 18L
24	20.75	2SVDP2402V	ZVC DW Pipe 24 x 24L
24	32.75	2SVDP2403V	ZVC DW Pipe 24 x 36L

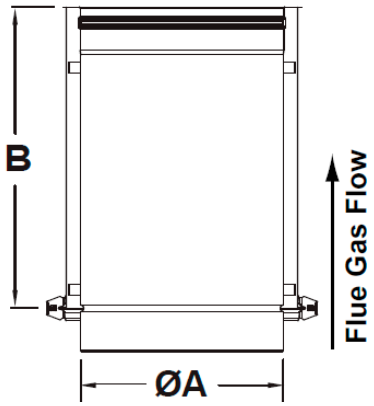

Z-VENT® Double Wall with ZV Clamp

ZV Clamp DW Pipe Adjustable Length

A	B	C	Part Number	Description
6	8.5	15.75	2SVDPA06V	ZVC DW Pipe Adjustable
7	8.5	15.75	2SVDPA07V	ZVC DW Pipe Adjustable
8	8.5	15.75	2SVDPA08V	ZVC DW Pipe Adjustable
9	8.5	15.75	2SVDPA09V	ZVC DW Pipe Adjustable
10	8.5	15.75	2SVDPA10V	ZVC DW Pipe Adjustable
12	8.5	15.75	2SVDPA12V	ZVC DW Pipe Adjustable
14	6.5	14.75	2SVDPA14V	ZVC DW Pipe Adjustable
16	6.5	14.75	2SVDPA16V	ZVC DW Pipe Adjustable
18	6.5	14.75	2SVDPA18V	ZVC DW Pipe Adjustable
20	6.5	14.75	2SVDPA20V	ZVC DW Pipe Adjustable
22	6.5	14.75	2SVDPA22V	ZVC DW Pipe Adjustable
24	6.5	14.75	2SVDPA24V	ZVC DW Pipe Adjustable

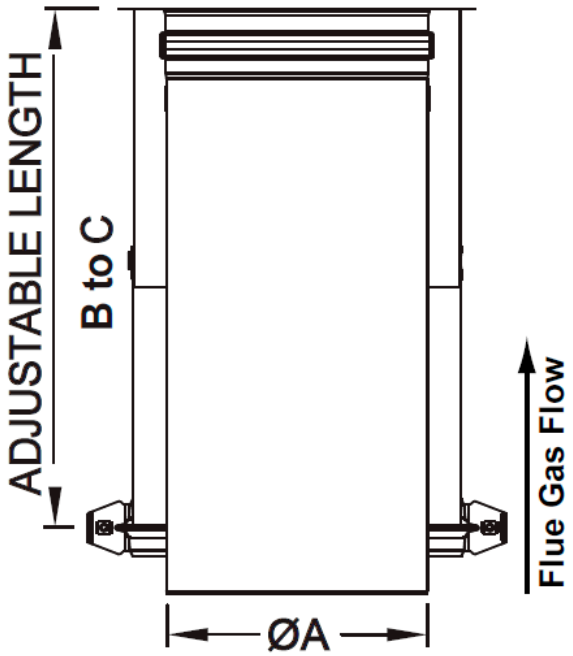

Vent length with test port allows easy access for flue gas analysis.

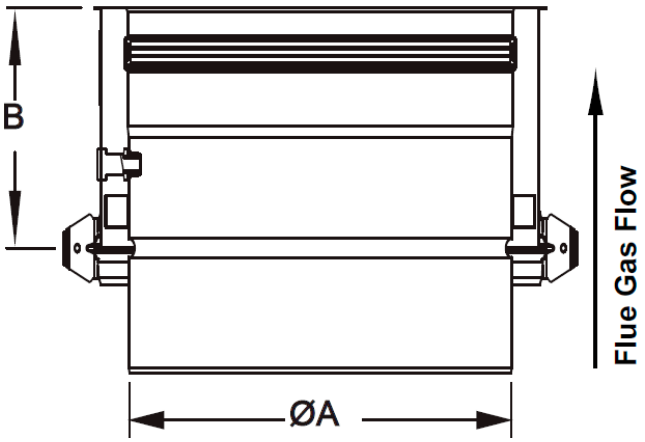

ZV Clamp DW Pipe Inspection Port

A	B	Part Number	Description
6	4.75	2SVDPRT06.5V	ZVC DW Pipe Inpection Port 6 x 6L
7	4.75	2SVDPRT07.5V	ZVC DW Pipe Inpection Port 7 x 6L
8	4.75	2SVDPRT08.5V	ZVC DW Pipe Inpection Port 8 x 6L
9	4.75	2SVDPRT09.5V	ZVC DW Pipe Inpection Port 9 x 6L
10	4.75	2SVDPRT10.5V	ZVC DW Pipe Inpection Port 10 x 6L
12	4.75	2SVDPRT12.5V	ZVC DW Pipe Inpection Port 12 x 6L
14	5.75	2SVDPRT14.5V	ZVC DW Pipe Inpection Port 14 x 6L
16	5.75	2SVDPRT16.5V	ZVC DW Pipe Inpection Port 16 x 6L
18	5.75	2SVDPRT18.5V	ZVC DW Pipe Inpection Port 18 x 6L
20	5.75	2SVDPRT20.5V	ZVC DW Pipe Inpection Port 20 x 6L
22	5.75	2SVDPRT22.5V	ZVC DW Pipe Inpection Port 22 x 6L
24	5.75	2SVDPRT24.5V	ZVC DW Pipe Inpection Port 24 x 6L

ZV Clamp DW Elbow 15°

A	B	C	Part Number	Description
6	2.64	2.71	2SVDE0615V	ZVC DW Elbow 6 x 15°
7	4.39	4.46	2SVDE0715V	ZVC DW Elbow 7 x 15°
8	2.78	4.53	2SVDE0815V	ZVC DW Elbow 8 x 15°
9	2.84	4.59	2SVDE0915V	ZVC DW Elbow 9 x 15°
10	2.91	4.66	2SVDE1015V	ZVC DW Elbow 10 x 15°
12	3.04	4.79	2SVDE1215V	ZVC DW Elbow 12 x 15°
14	3.17	5.92	2SVDE1415V	ZVC DW Elbow 14 x 15°
16	3.30	6.05	2SVDE1615V	ZVC DW Elbow 16 x 15°
18	3.43	6.18	2SVDE1815V	ZVC DW Elbow 18 x 15°
20	3.57	6.32	2SVDE2015V	ZVC DW Elbow 20 x 15°
22	3.70	6.45	2SVDE2215V	ZVC DW Elbow 22 x 15°
24	3.83	6.58	2SVDE2415V	ZVC DW Elbow 24 x 15°

15° elbows are used when a direction change or offset is required

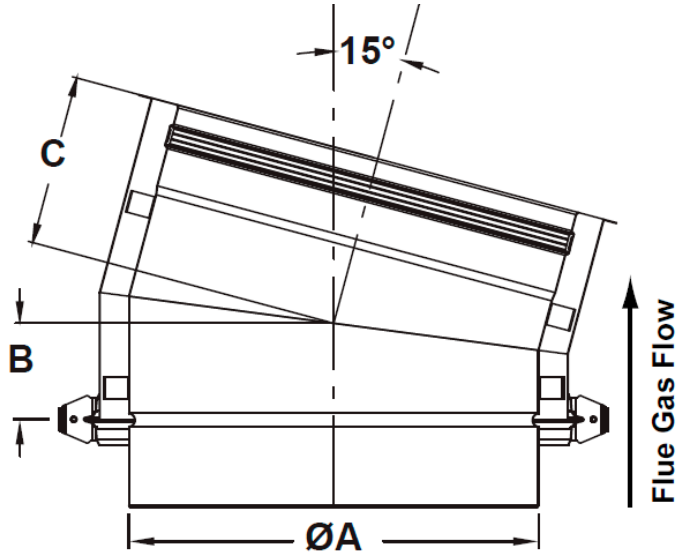

30° elbows are used when a direction change or offset is required.

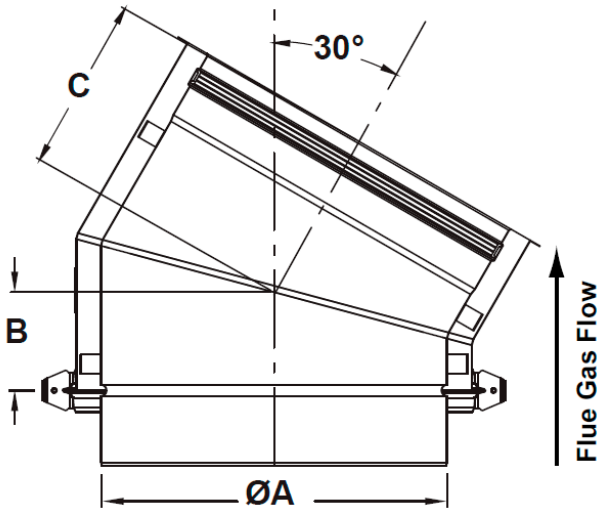

ZV Clamp DW Elbow 30°

A	B	C	Part Number	Description
6	3.05	4.8	2SVDE0630V	ZVC DW Elbow 6 x 30°
7	3.19	4.94	2SVDE0730V	ZVC DW Elbow 7 x 30°
8	3.32	5.07	2SVDE0830V	ZVC DW Elbow 8 x 30°
9	3.46	5.21	2SVDE0930V	ZVC DW Elbow 9 x 30°
10	3.59	5.35	2SVDE1030V	ZVC DW Elbow 10 x 30°
12	3.86	5.61	2SVDE1230V	ZVC DW Elbow 12 x 30°
14	4.38	6.88	2SVDE1430V	ZVC DW Elbow 14 x 30°
16	4.64	7.14	2SVDE1630V	ZVC DW Elbow 16 x 30°
18	4.91	7.41	2SVDE1830V	ZVC DW Elbow 18 x 30°
20	5.18	7.68	2SVDE2030V	ZVC DW Elbow 20 x 30°
22	5.45	7.95	2SVDE2230V	ZVC DW Elbow 22 x 30°
24	5.72	8.22	2SVDE2430V	ZVC DW Elbow 24 x 30°

Z-VENT® Double Wall with ZV Clamp

ZV Clamp DW Elbow 45°

A	B	C	Part Number	Description
6	4.37	6.12	2SVDE0645V	ZVC DW Elbow 6 x 45°
7	4.58	6.33	2SVDE0745V	ZVC DW Elbow 7 x 45°
8	4.79	6.54	2SVDE0845V	ZVC DW Elbow 8 x 45°
9	5.00	6.75	2SVDE0945V	ZVC DW Elbow 9 x 45°
10	5.20	6.96	2SVDE1045V	ZVC DW Elbow 10 x 45°
12	5.61	7.36	2SVDE1245V	ZVC DW Elbow 12 x 45°
14	6.03	8.78	2SVDE1445V	ZVC DW Elbow 14 x 45°
16	6.44	9.19	2SVDE1645V	ZVC DW Elbow 16 x 45°
18	6.86	9.61	2SVDE1845V	ZVC DW Elbow 18 x 45°
20	7.27	10.02	2SVDE2045V	ZVC DW Elbow 20 x 45°
22	7.69	10.44	2SVDE2245V	ZVC DW Elbow 22 x 45°
24	8.10	10.85	2SVDE2445V	ZVC DW Elbow 24 x 45°

45° elbows are used when a direction change or offset is required.

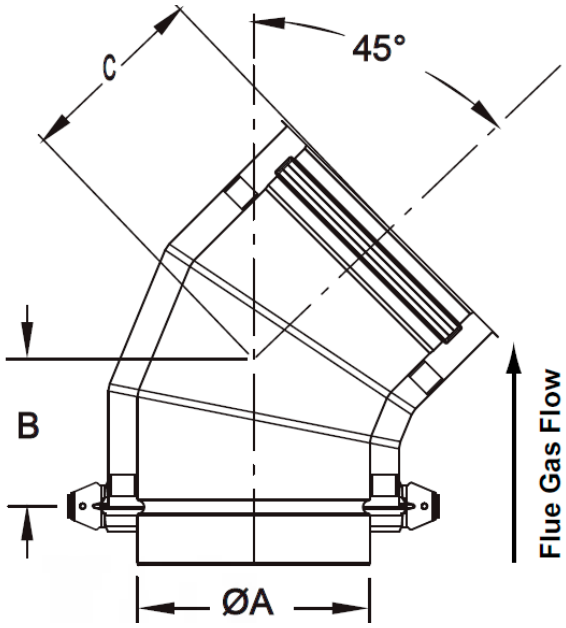

90° elbows are used when a direction change or offset is required.

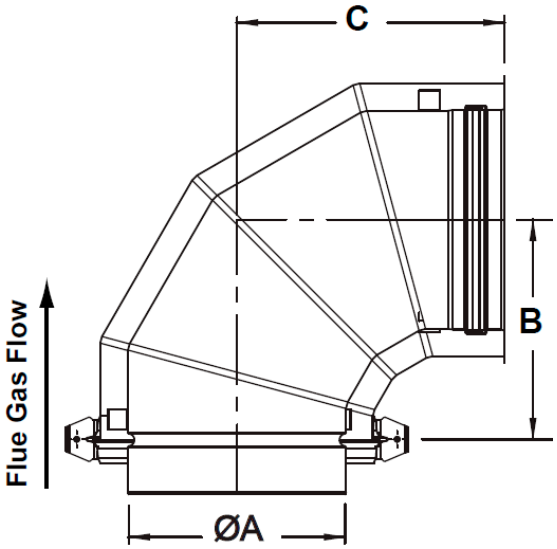

ZV Clamp DW Elbow 90°

A	B	C	Part Number	Description
6	7.5	9.28	2SVDE0690V	ZVC DW Elbow 6 x 90°
7	8.28	9.84	2SVDE0790V	ZVC DW Elbow 7 x 90°
8	8.13	9.85	2SVDE0890V	ZVC DW Elbow 8 x 90°
9	9.30	10.88	2SVDE0990V	ZVC DW Elbow 9 x 90°
10	9.50	11.20	2SVDE1090V	ZVC DW Elbow 10 x 90°
12	10.50	12.20	2SVDE1290V	ZVC DW Elbow 12 x 90°
14	11.15	12.75	2SVDE1490V	ZVC DW Elbow 14 x 90°
16	12.00	14.53	2SVDE1690V	ZVC DW Elbow 16 x 90°
18	13.00	15.58	2SVDE1890V	ZVC DW Elbow 18 x 90°
20	14.50	17.00	2SVDE2090V	ZVC DW Elbow 20 x 90°
22	16.00	19.00	2SVDE2290V	ZVC DW Elbow 22 x 90°
24	18.66	21.20	2SVDE2490V	ZVC DW Elbow 24 x 90°

ZV Clamp DW Low Resistance Rain Cap

A	C	D	Part Number	Description
6	7.75	12.5	2SVDRC06V	ZVC DW Rain Cap 6
7	9	14	2SVDRC07V	ZVC DW Rain Cap 7
8	9	14	2SVDRC08V	ZVC DW Rain Cap 8
9	10.5	18.5	2SVDRC09V	ZVC DW Rain Cap 9
10	11.8	18.5	2SVDRC10V	ZVC DW Rain Cap 10
12	12	22.125	2SVDRC12V	ZVC DW Rain Cap 12
14	13	25.75	2SVDRC14V	ZVC DW Rain Cap 14
16	13.5	28	2SVDRC16V	ZVC DW Rain Cap 16
18	15	31.75	2SVDRC18V	ZVC DW Rain Cap 18
20	16	35	2SVDRC20V	ZVC DW Rain Cap 20
22	17.5	39	2SVDRC22V	ZVC DW Rain Cap 22
24	17.75	41	2SVDRC24V	ZVC DW Rain Cap 24

A low resistance rain cap is designed to terminate a vertical stack and prevent the entrance of debris or rain into the vent. It also provides low resistance to flue gas flow.

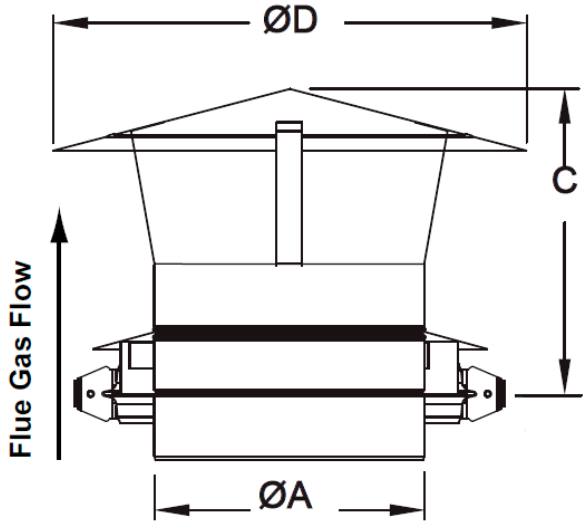

A rain cap is designed to terminate a vertical stack and prevent the entrance of debris or rain into the vent. Includes wind band to prevent draft loss.

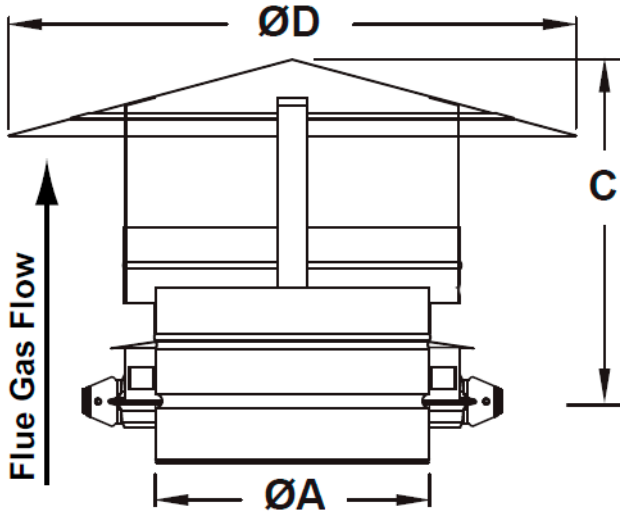

ZV Clamp DW Rain Cap with Wind Band

A	C	D	Part Number	Description
6	9.5	12	2SVDRCX06V	ZVC DW Rain Cap Wind Band 6
7	9.5	12	2SVDRCX07V	ZVC DW Rain Cap Wind Band 7
8	9.5	15	2SVDRCX08V	ZVC DW Rain Cap Wind Band 8
9	11.5	18.5	2SVDRCX09V	ZVC DW Rain Cap Wind Band 9
10	11.5	18.5	2SVDRCX10V	ZVC DW Rain Cap Wind Band 10
12	12	21	2SVDRCX12V	ZVC DW Rain Cap Wind Band 12
14	13	23	2SVDRCX14V	ZVC DW Rain Cap Wind Band 14
16	14.3	24.75	2SVDRCX16V	ZVC DW Rain Cap Wind Band 16
18	14.25	29.63	2SVDRCX18V	ZVC DW Rain Cap Wind Band 18
20	15	31.5	2SVDRCX20V	ZVC DW Rain Cap Wind Band 20
22	15.75	33.5	2SVDRCX22V	ZVC DW Rain Cap Wind Band 22
24	16.35	34.5	2SVDRCX24V	ZVC DW Rain Cap Wind Band 24

Z-VENT® Double Wall with ZV Clamp

ZV Clamp DW Wall Termination Box

A	B	Part Number	Description
6	5.75	2SVDRTX06V	ZVC DW Wall Termination Box 6
7	5.75	2SVDRTX07V	ZVC DW Wall Termination Box 7
8	5.75	2SVDRTX08V	ZVC DW Wall Termination Box 8
9	5.75	2SVDRTX09V	ZVC DW Wall Termination Box 9
10	8	2SVDRTX10V	ZVC DW Wall Termination Box 10
12	7	2SVDRTX12V	ZVC DW Wall Termination Box 12
14	10	2SVDRTX14V	ZVC DW Wall Termination Box 14
16	11	2SVDRTX16V	ZVC DW Wall Termination Box 16
18	12	2SVDRTX18V	ZVC DW Wall Termination Box 18
20	13	2SVDRTX20V	ZVC DW Wall Termination Box 20
22	14	2SVDRTX22V	ZVC DW Wall Termination Box 22
24	15	2SVDRTX24V	ZVC DW Wall Termination Box 24

A wall termination is used to terminate a horizontal vent. The special design resists winds from affecting flue gas flow.

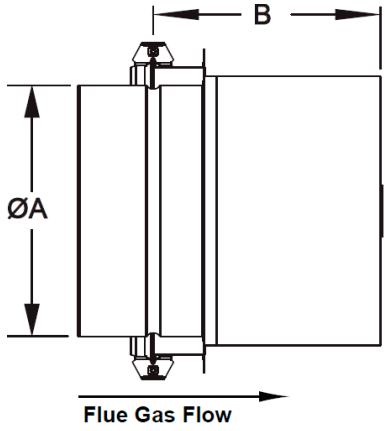

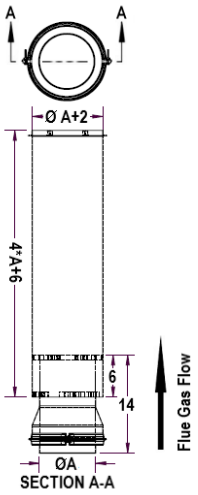

ZV Clamp DW Termination No Loss Stack

A	Part Number	Description
6	2SVDTNLS06V	ZVC Termination No Loss Stack 6 in
8	2SVDTNLS08V	ZVC Termination No Loss Stack 8 in
10	2SVDTNLS10V	ZVC Termination No Loss Stack 10 in
12	2SVDTNLS12V	ZVC Termination No Loss Stack 12 in
14	2SVDTNLS14V	ZVC Termination No Loss Stack 14 in
16	2SVDTNLS16V	ZVC Termination No Loss Stack 16 in
20	2SVDTNLS20V	ZVC Termination No Loss Stack 20 in

ZV Clamp DW Exit Cone

A	B	C	Part Number	Description
6	4.875	9.25	2SVDXITC06V	ZVC DW Exit Cone 6
7	5.69	9.75	2SVDXITC07V	ZVC DW Exit Cone 7
8	6.5	10.25	2SVDXITC08V	ZVC DW Exit Cone 8
9	7.31	10.92	2SVDXITC09V	ZVC DW Exit Cone 9
10	8.2	11.25	2SVDXITC10V	ZVC DW Exit Cone 10
12	9.6	12.75	2SVDXITC12V	ZVC DW Exit Cone 12
14	11.5	13.75	2SVDXITC14V	ZVC DW Exit Cone 14
16	13.25	14.75	2SVDXITC16V	ZVC DW Exit Cone 16
18	14.75	15.75	2SVDXITC18V	ZVC DW Exit Cone 18
20	16.5	16.75	2SVDXITC20V	ZVC DW Exit Cone 20
22	18	17.75	2SVDXITC22V	ZVC DW Exit Cone 22
24	19.5	18.75	2SVDXITC24V	ZVC DW Exit Cone 24

Designed to increase stack velocity. Extremely low resistance. It is recommended to use tee cap with drain at base of stack.

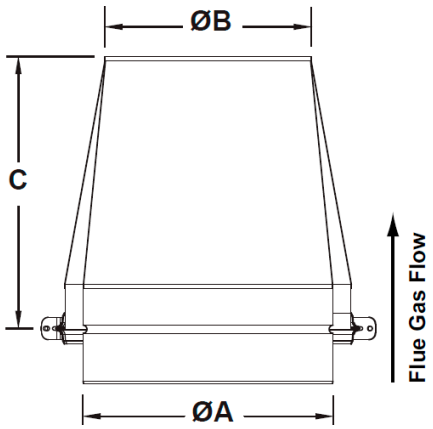

ZV Clamp DW Termination Screen

A	B	Part Number	Description
6	4	2SVDTS06V	ZVC DW Termination Screen 6
7	4	2SVDTS07V	ZVC DW Termination Screen 7
8	4	2SVDTS08V	ZVC DW Termination Screen 8
9	4	2SVDTS09V	ZVC DW Termination Screen 9
10	4	2SVDTS10V	ZVC DW Termination Screen 10
12	4	2SVDTS12V	ZVC DW Termination Screen 12
14	4	2SVDTS14V	ZVC DW Termination Screen 14
16	4	2SVDTS16V	ZVC DW Termination Screen 16
18	5	2SVDTS18V	ZVC DW Termination Screen 18
20	5	2SVDTS20V	ZVC DW Termination Screen 20
22	5	2SVDTS22V	ZVC DW Termination Screen 22
24	5	2SVDTS24V	ZVC DW Termination Screen 24

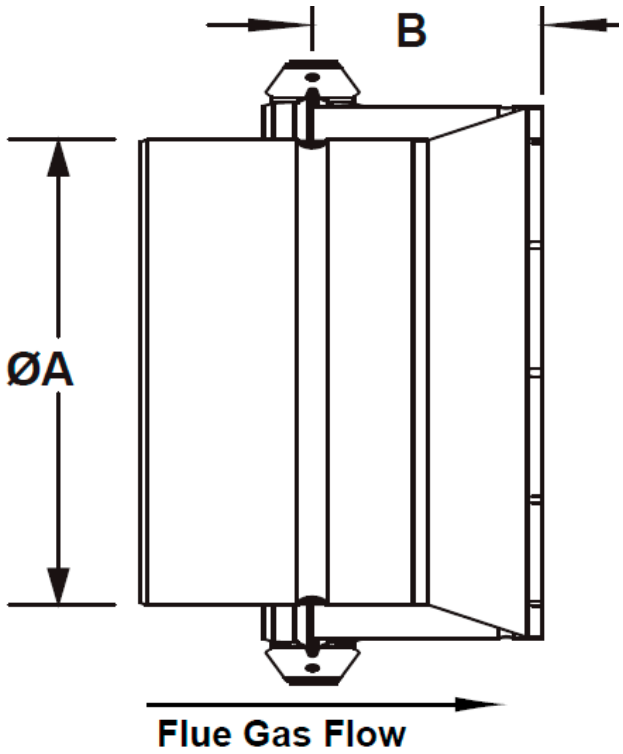

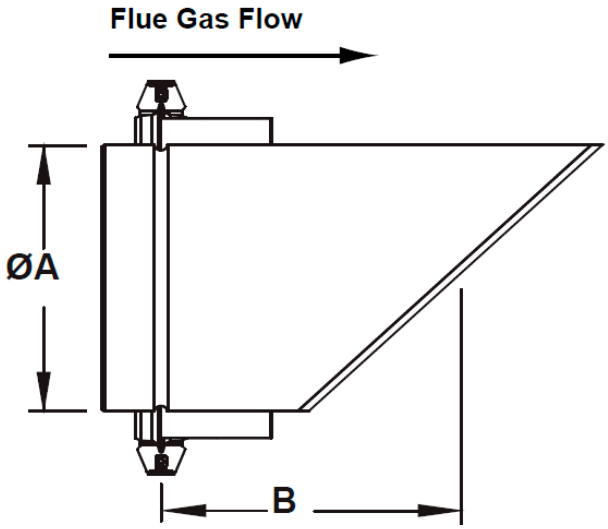

ZV Clamp DW 45° Angle Termination

A	B	Part Number	Description
6	8	2SVDAT06V	ZVC DW 45° Angle Termination 6
7	8.5	2SVDAT07V	ZVC DW 45° Angle Termination 7
8	9	2SVDAT08V	ZVC DW 45° Angle Termination 8
9	9.5	2SVDAT09V	ZVC DW 45° Angle Termination 9
10	10	2SVDAT10V	ZVC DW 45° Angle Termination 10
12	11	2SVDAT12V	ZVC DW 45° Angle Termination 12
14	12	2SVDAT14V	ZVC DW 45° Angle Termination 14
16	13	2SVDAT16V	ZVC DW 45° Angle Termination 16
18	14	2SVDAT18V	ZVC DW 45° Angle Termination 18
20	14	2SVDAT20V	ZVC DW 45° Angle Termination 20
22	16	2SVDAT22V	ZVC DW 45° Angle Termination 22
24	17	2SVDAT24V	ZVC DW 45° Angle Termination 24

Z-VENT® Double Wall with ZV Clamp

ZV Clamp DW 4-7" Wall Thimble Pipe

A	B	C	D	E	F	G	Part Number	Description
6	15.5	9	7	4	12	15	2SVDWT06V	ZVC 4-7 Wall Thimble Pipe 6DW Clamp
7	15.5	9	7	4	13	16	2SVDWT07V	ZVC 4-7 Wall Thimble Pipe 7DW Clamp
8	15.5	9	7	4	14	17	2SVDWT08V	ZVC 4-7 Wall Thimble Pipe 8DW Clamp
9	15.5	9	7	4	15	18	2SVDWT09V	ZVC 4-7 Wall Thimble Pipe 9DW Clamp
10	15.5	9	7	4	16	19	2SVDWT10V	ZVC 4-7 Wall Thimble Pipe 10DW Clamp
12	15.5	9	7	4	18	21	2SVDWT12V	ZVC 4-7 Wall Thimble Pipe 12DW Clamp
14	14.5	9	7	4	20	23	2SVDWT14V	ZVC 4-7 Wall Thimble Pipe 14DW Clamp
16	14.5	9	7	4	22	25	2SVDWT16V	ZVC 4-7 Wall Thimble Pipe 16DW Clamp
18	14.5	9	7	4	24	27	2SVDWT18V	ZVC 4-7 Wall Thimble Pipe 18DW Clamp
20	14.5	9	7	4	26	29	2SVDWT20V	ZVC 4-7 Wall Thimble Pipe 20DW Clamp
22	14.5	9	7	4	28	31	2SVDWT22V	ZVC 4-7 Wall Thimble Pipe 22DW Clamp
24	14.5	9	7	4	30	33	2SVDWT24V	ZVC 4-7 Wall Thimble Pipe 24DW Clamp

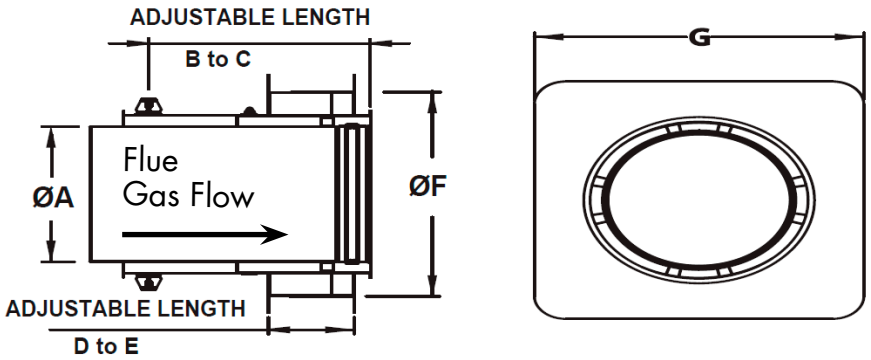

ZV Clamp DW 7-13" Wall Thimble Pipe

A	B	C	D	E	F	G	Part Number	Description
6	21.5	15	13	7	12	15	2SVDWTM06V	ZVC 7-13 Wall Thimble Pipe 6DW Clamp
7	21.5	15	13	7	13	16	2SVDWTM07V	ZVC 7-13 Wall Thimble Pipe 7DW Clamp
8	21.5	15	13	7	14	17	2SVDWTM08V	ZVC 7-13 Wall Thimble Pipe 8DW Clamp
9	21.5	15	13	7	15	18	2SVDWTM09V	ZVC 7-13 Wall Thimble Pipe 9DW Clamp
10	21.5	15	13	7	16	19	2SVDWTM10V	ZVC 7-13 Wall Thimble Pipe 10DW Clamp
12	21.5	15	13	7	18	21	2SVDWTM12V	ZVC 7-13 Wall Thimble Pipe 12DW Clamp
14	20.5	15	13	7	20	23	2SVDWTM14V	ZVC 7-13 Wall Thimble Pipe 14DW Clamp
16	20.5	15	13	7	22	25	2SVDWTM16V	ZVC 7-13 Wall Thimble Pipe 16DW Clamp
18	20.5	15	13	7	24	27	2SVDWTM18V	ZVC 7-13 Wall Thimble Pipe 18DW Clamp
20	20.5	15	13	7	26	29	2SVDWTM20V	ZVC 7-13 Wall Thimble Pipe 20DW Clamp
22	20.5	15	13	7	28	31	2SVDWTM22V	ZVC 7-13 Wall Thimble Pipe 22DW Clamp
24	20.5	15	13	7	30	33	2SVDWTM24V	ZVC 7-13 Wall Thimble Pipe 24DW Clamp

ZV Clamp DW Clamp

A	Part Number	Description
8	2SVCLB08	ZVC DW Clamp 6DW
10	2SVCLB10	ZVC DW Clamp 8DW
11	2SVCLB11	ZVC DW Clamp 9DW
12	2SVCLB12	ZVC DW Clamp 10DW
14	2SVCLB14	ZVC DW Clamp 12DW
16	2SVCLB16	ZVC DW Clamp 14DW
18	2SVCLB18	ZVC DW Clamp 16DW
20	2SVCLB20	ZVC DW Clamp 18DW
22	2SVCLB22	ZVC DW Clamp 20DW
24	2SVCLB24	ZVC DW Clamp 22DW
26	2SVCLB26	ZVC DW Clamp 24DW

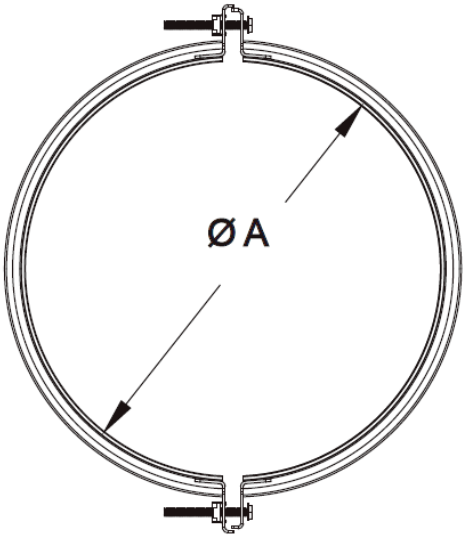

ZV Clamp Replacement Hardware

Bolt: OHWH103208SS
Nut: OCN1032SS

ZV Clamp Gasket

To seal DW flanges when mounted outside.
Install over mated flanges before ZV Clamp.

A	Part Number	Description
8	0GSKTE08	ZV-Clamp Gasket 6DW
9	0GSKTE09	ZV-Clamp Gasket 7DW
10	0GSKTE10	ZV-Clamp Gasket 8DW
11	0GSKTE11	ZV-Clamp Gasket 9DW
12	0GSKTE12	ZV-Clamp Gasket 10DW
14	0GSKTE14	ZV-Clamp Gasket 12DW
16	0GSKTE16	ZV-Clamp Gasket 14DW
18	0GSKTE18	ZV-Clamp Gasket 16DW
20	0GSKTE20	ZV-Clamp Gasket 18DW
22	0GSKTE22	ZV-Clamp Gasket 20DW
24	0GSKTE24	ZV-Clamp Gasket 22DW
26	0GSKTE26	ZV-Clamp Gasket 24DW

NOTES:

Single Wall:

1. Add 0.50" to vent diameter to obtain gear clamp outside diameter

Double Wall with ZV Clamp:

1. Add 2" to inner vent diameter to obtain double wall outside diameter
2. Add 2.5" to inner vent diameter to obtain double wall flange outside diameter
3. Add 4.75" to inner vent diameter to obtain double wall outside diameter including ZV Clamp
4. ZV Clamp is included on male end of parts.

Smoothcore:

1. Add 0.25" to vent diameter to obtain smotthcore flex outside diameter
2. Add 0.50" to vent diameter to obtain smoothcore connector gear clamp outside diameter

No Loss Stacks (NLS):

1. NLS have not be evaluated by UL.
2. NLS designs are similar to ones used for decades and shown in American Society of Heating, Refrigeration and Air-Conditioning Engineers & American Conference of Governmental Industrial Hygienists handbooks.

Rain Cap / Flashing

A	B	Square Plate C (in)	Part Number	Description
4.75	10.75	13	2SVFLXRF04	Z-Vent Flex Raincap/Flashing 4in
5.75	10.75	13	2SVFLXRF05	Z-Vent Flex Raincap/Flashing 5in
6.75	10.75	16	2SVFLXRF06	Z-Vent Flex Raincap/Flashing 6in
7.75	10.75	16	2SVFLXRF07	Z-Vent Flex Raincap/Flashing 7in
8.75	10.75	16	2SVFLXRF08	Z-Vent Flex Raincap/Flashing 8in
9.75	10.75	18	2SVFLXRF09	Z-Vent Flex Raincap/Flashing 9in
10.75	10.75	18	2SVFLXRF10	Z-Vent Flex Raincap/Flashing 10in
12.75	11.25	26	2SVFLXRF12	Z-Vent Flex Raincap/Flashing 12in

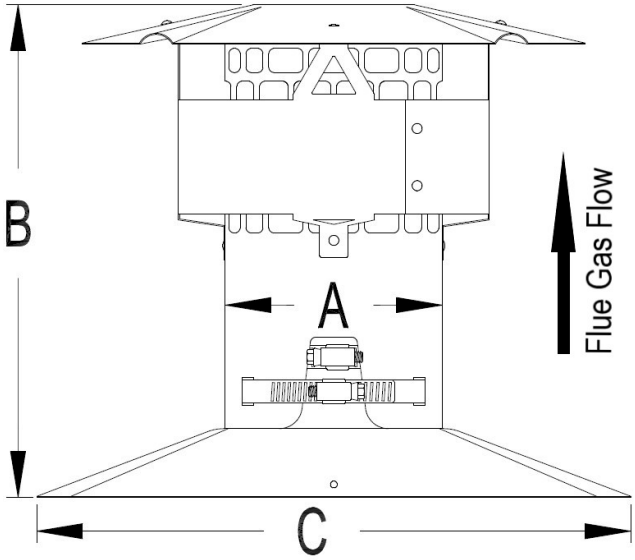

Rain Cap Extension

Used to raise rain cap up.

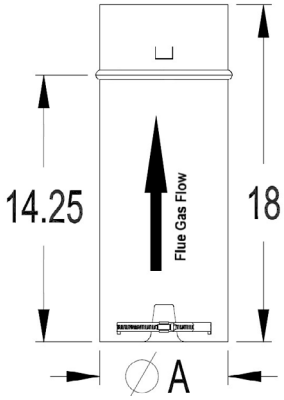

A (in)	Part Number
4.75	2ZMEXT04
5.75	2ZMEXT05
6.75	2ZMEXT06
7.75	2ZMEXT07
8.75	2ZMEXT08
9.75	2ZMEXT09
10.75	2ZMEXT10
12.75	2ZMEXT12

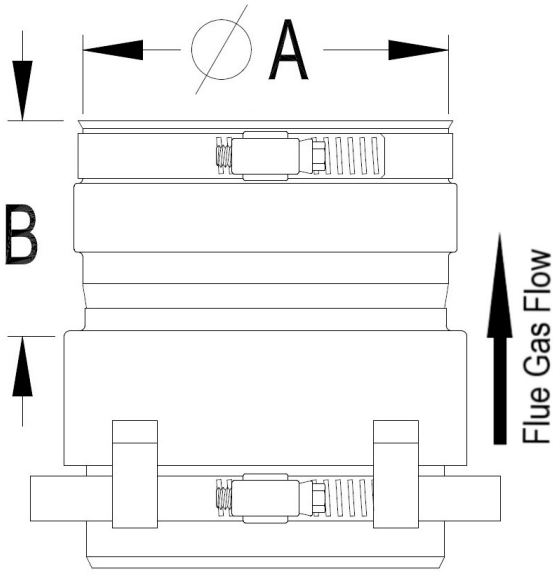

Female Connector

A (in)	Installed Length B (in)	Part Number	Description
4	2.5	2SVFCON04	Z-Vent Flex Female Connector 4in
5	2.5	2SVFCON05	Z-Vent Flex Female Connector 5in
6	2.5	2SVFCON06	Z-Vent Flex Female Connector 6in
7	2.5	2SVFCON07	Z-Vent Flex Female Connector 7in
8	2.5	2SVFCON08	Z-Vent Flex Female Connector 8in
9	2.5	2SVFCON09	Z-Vent Flex Female Connector 9in
10	2.5	2SVFCON10	Z-Vent Flex Female Connector 10in
12	2.5	2SVFCON12	Z-Vent Flex Female Connector 12in

Smoothcore Flex

A	B	Part Number
4	5	2ZLSCSV0405
4	10	2ZLSCSV0410
4	15	2ZLSCSV0415
4	20	2ZLSCSV0420
4	25	2ZLSCSV0425
4	30	2ZLSCSV0430
4	35	2ZLSCSV0435
5	5	2ZLSCSV0505
5	10	2ZLSCSV0510
5	15	2ZLSCSV0515
5	20	2ZLSCSV0520
5	25	2ZLSCSV0525
5	30	2ZLSCSV0530
5	35	2ZLSCSV0535
6	5	2ZLSCSV0605
6	10	2ZLSCSV0610
6	15	2ZLSCSV0615
6	20	2ZLSCSV0620
6	25	2ZLSCSV0625
6	30	2ZLSCSV0630
6	35	2ZLSCSV0635
7	5	2ZLSCSV0705
7	10	2ZLSCSV0710
7	15	2ZLSCSV0715
7	20	2ZLSCSV0720

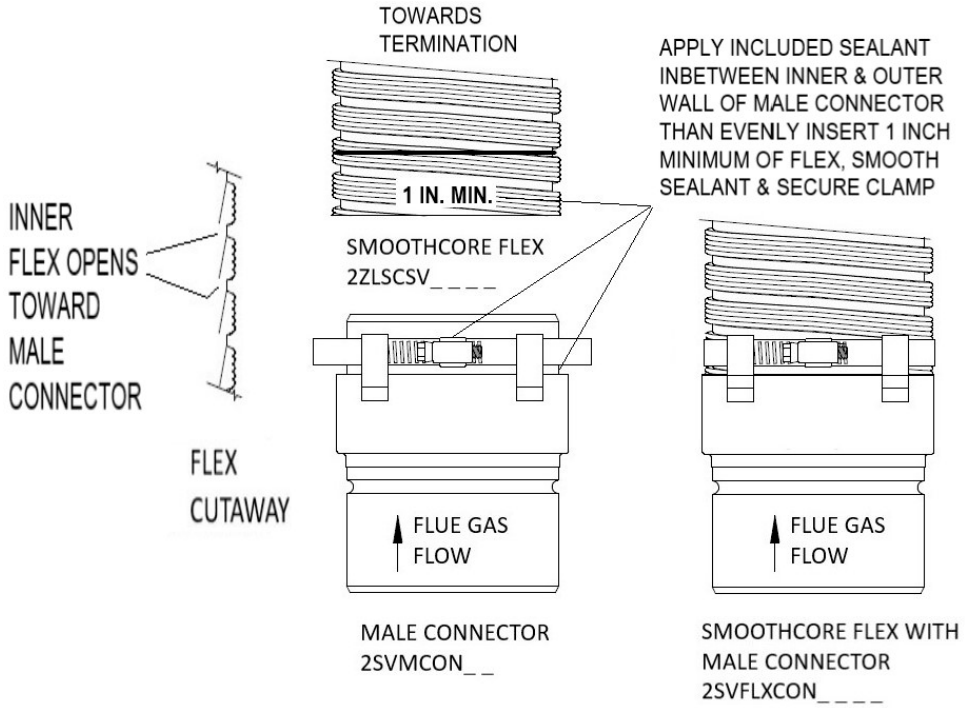

A	B	Part Number
7	25	2ZLSCSV0725
7	30	2ZLSCSV0730
7	35	2ZLSCSV0735
8	5	2ZLSCSV0805
8	10	2ZLSCSV0810
8	15	2ZLSCSV0815
8	20	2ZLSCSV0820
8	25	2ZLSCSV0825
8	30	2ZLSCSV0830
8	35	2ZLSCSV0835
9	5	2ZLSCSV0905
9	10	2ZLSCSV0910
9	15	2ZLSCSV0915
10	5	2ZLSCSV1005
10	10	2ZLSCSV1010
10	15	2ZLSCSV1015
12	5	2ZLSCSV1205
12	10	2ZLSCSV1210
12	15	2ZLSCSV1215

Male Connector

A	Part Number	Description
4	2SVMCON04	Z-Vent Flex Male Connector 4in
5	2SVMCON05	Z-Vent Flex Male Connector 5in
6	2SVMCON06	Z-Vent Flex Male Connector 6in
7	2SVMCON07	Z-Vent Flex Male Connector 7in
8	2SVMCON08	Z-Vent Flex Male Connector 8in
9	2SVMCON09	Z-Vent Flex Male Connector 9in
10	2SVMCON10	Z-Vent Flex Male Connector 10in
12	2SVMCON12	Z-Vent Flex Male Connector 12in

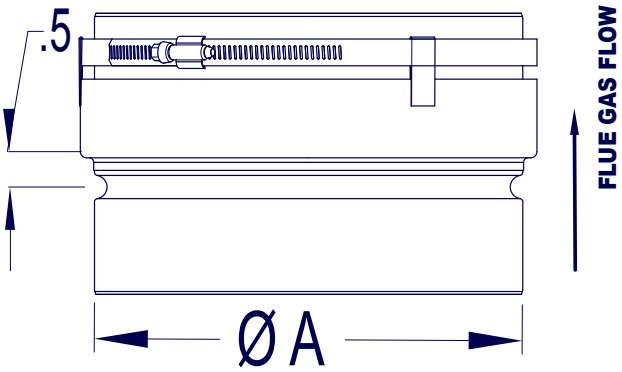

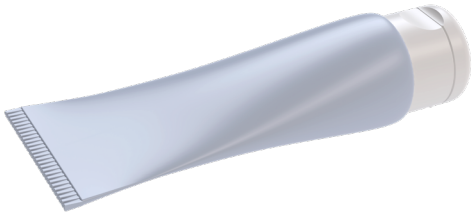

Sealant

Part Number	Description
Sealant 10 Oz	2SILICONER

NOTE: 5 oz. of sealant is required per connector/flex joint.

Z-Vent Concentric Pipe

A	B	C	D	Part Number	Description
3	4	3.75	5.75	2SVCP34.5	Z-Vent Concentric Pipe 3/4 x 6in
3	4	9.75	11.75	2SVCP3401	Z-Vent Concentric Pipe 3/4 x 1ft
3	4	15.75	17.75	2SVCP3401.5	Z-Vent Concentric Pipe 3/4 x 1.5ft
3	4	21.75	23.75	2SVCP3402	Z-Vent Concentric Pipe 3/4 x 2ft
3	4	33.75	35.75	2SVCP3403	Z-Vent Concentric Pipe 3/4 x 3ft
3	4	45.75	47.75	2SVCP3404	Z-Vent Concentric Pipe 3/4 x 4ft
3	5	3.75	5.75	2SVCP35.5	Z-Vent Concentric Pipe 3/5 x 6in
3	5	9.75	11.75	2SVCP3501	Z-Vent Concentric Pipe 3/5 x 1ft
3	5	15.75	17.75	2SVCP3501.5	Z-Vent Concentric Pipe 3/5 x 1.5ft
3	5	21.75	23.75	2SVCP3502	Z-Vent Concentric Pipe 3/5 x 2ft
3	5	33.75	35.75	2SVCP3503	Z-Vent Concentric Pipe 3/5 x 3ft
3	5	45.75	47.75	2SVCP3504	Z-Vent Concentric Pipe 3/5 x 4ft
4	6	3.75	5.75	2SVCP46.5	Z-Vent Concentric Pipe 4/6 x 6in
4	6	9.75	11.75	2SVCP4601	Z-Vent Concentric Pipe 4/6 x 1ft
4	6	15.75	17.75	2SVCP4601.5	Z-Vent Concentric Pipe 4/6 x 1.5ft
4	6	21.75	23.75	2SVCP4602	Z-Vent Concentric Pipe 4/6 x 2ft
4	6	33.75	35.75	2SVCP4603	Z-Vent Concentric Pipe 4/6 x 3ft
4	6	45.75	47.75	2SVCP4604	Z-Vent Concentric Pipe 4/6 x 4ft
4	7	3.75	5.75	2SVCP47.5	Z-Vent Concentric Pipe 4/7 x 6in
4	7	9.75	11.75	2SVCP4701	Z-Vent Concentric Pipe 4/7 x 1ft
4	7	15.75	17.75	2SVCP4701.5	Z-Vent Concentric Pipe 4/7 x 1.5ft
4	7	21.75	23.75	2SVCP4702	Z-Vent Concentric Pipe 4/7 x 2ft
4	7	33.75	35.75	2SVCP4703	Z-Vent Concentric Pipe 4/7 x 3ft
4	7	45.75	47.75	2SVCP4704	Z-Vent Concentric Pipe 4/7 x 4ft
5	7	3.75	5.75	2SVCP57.5	Z-Vent Concentric Pipe 5/7 x 6in
5	7	9.75	11.75	2SVCP5701	Z-Vent Concentric Pipe 5/7 x 1ft
5	7	15.75	17.75	2SVCP5701.5	Z-Vent Concentric Pipe 5/7 x 1.5ft
5	7	21.75	23.75	2SVCP5702	Z-Vent Concentric Pipe 5/7 x 2ft
5	7	33.75	35.75	2SVCP5703	Z-Vent Concentric Pipe 5/7 x 3ft
5	7	45.75	47.75	2SVCP5704	Z-Vent Concentric Pipe 5/7 x 4ft
5	8	3.75	5.75	2SVCP58.5	Z-Vent Concentric Pipe 5/8 x 6in
5	8	9.75	11.75	2SVCP5801	Z-Vent Concentric Pipe 5/8 x 1ft
5	8	15.75	17.75	2SVCP5801.5	Z-Vent Concentric Pipe 5/8 x 1.5ft

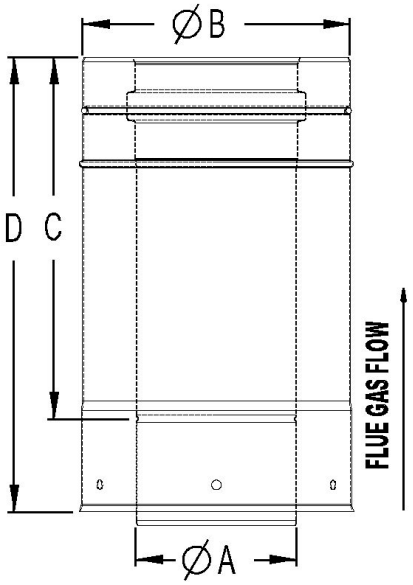

Z-Vent Concentric Pipe

A	B	C	D	Part Number	Description
5	8	21.75	23.75	2SVCP5802	Z-Vent Concentric Pipe 5/8 x 2ft
5	8	33.75	35.75	2SVCP5803	Z-Vent Concentric Pipe 5/8 x 3ft
5	8	45.75	47.75	2SVCP5804	Z-Vent Concentric Pipe 5/8 x 4ft
6	8	3.75	5.75	2SVCP68.5	Z-Vent Concentric Pipe 6/8 x 6in
6	8	9.75	11.75	2SVCP6801	Z-Vent Concentric Pipe 6/8 x 1ft
6	8	15.75	17.75	2SVCP6801.5	Z-Vent Concentric Pipe 6/8 x 1.5ft
6	8	21.75	23.75	2SVCP6802	Z-Vent Concentric Pipe 6/8 x 2ft
6	8	33.75	35.75	2SVCP6803	Z-Vent Concentric Pipe 6/8 x 3ft
6	8	45.75	47.75	2SVCP6804	Z-Vent Concentric Pipe 6/8 x 4ft
6	9	3.75	5.75	2SVCP69.5	Z-Vent Concentric Pipe 6/9 x 6in
6	9	9.75	11.75	2SVCP6901	Z-Vent Concentric Pipe 6/9 x 1ft
6	9	15.75	17.75	2SVCP6901.5	Z-Vent Concentric Pipe 6/9 x 1.5ft
6	9	21.75	23.75	2SVCP6902	Z-Vent Concentric Pipe 6/9 x 2ft
6	9	33.75	35.75	2SVCP6903	Z-Vent Concentric Pipe 6/9 x 3ft
6	9	45.75	47.75	2SVCP6904	Z-Vent Concentric Pipe 6/9 x 4ft
7	10	3.75	5.75	2SVCP710.5	Z-Vent Concentric Pipe 7/10 x 6in
7	10	9.75	11.75	2SVCP71001	Z-Vent Concentric Pipe 7/10 x 1ft
7	10	15.75	17.75	2SVCP71001.5	Z-Vent Concentric Pipe 7/10 x 1.5ft
7	10	21.75	23.75	2SVCP71002	Z-Vent Concentric Pipe 7/10 x 2ft
7	10	33.75	35.75	2SVCP71003	Z-Vent Concentric Pipe 7/10 x 3ft
7	10	45.75	47.75	2SVCP71004	Z-Vent Concentric Pipe 7/10 x 4ft
8	11	3.75	5.75	2SVCP811.5	Z-Vent Concentric Pipe 8/11 x 6in
8	11	9.75	11.75	2SVCP81101	Z-Vent Concentric Pipe 8/11 x 1ft
8	11	15.75	17.75	2SVCP81101.5	Z-Vent Concentric Pipe 8/11 x 1.5ft
8	11	21.75	23.75	2SVCP81102	Z-Vent Concentric Pipe 8/11 x 2ft
8	11	33.75	35.75	2SVCP81103	Z-Vent Concentric Pipe 8/11 x 3ft
8	11	45.75	47.75	2SVCP81104	Z-Vent Concentric Pipe 8/11 x 4ft
8	12	3.75	5.75	2SVCP812.5	Z-Vent Concentric Pipe 8/12 x 6in
8	12	9.75	11.75	2SVCP81201	Z-Vent Concentric Pipe 8/12 x 1ft
8	12	15.75	17.75	2SVCP81201.5	Z-Vent Concentric Pipe 8/12 x 1.5ft
8	12	21.75	23.75	2SVCP81202	Z-Vent Concentric Pipe 8/12 x 2ft
8	12	33.75	35.75	2SVCP81203	Z-Vent Concentric Pipe 8/12 x 3ft
8	12	45.75	47.75	2SVCP81204	Z-Vent Concentric Pipe 8/12 x 4ft

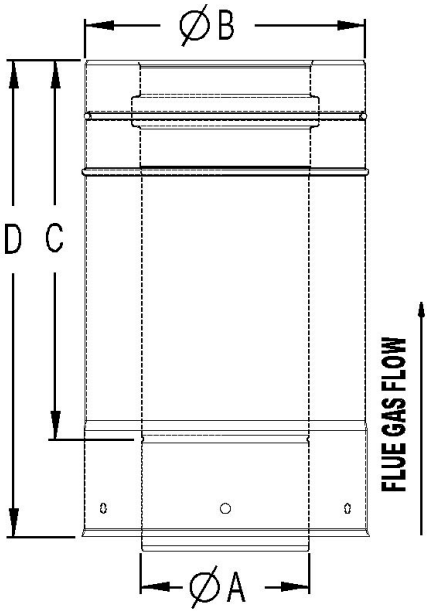

Z-Vent Concentric Adjustable Pipe

A	B	C	D	Part Number	Description
3	4	9.5	13.9	2SVCPA34	Z-Vent Concentric Pipe Adjustable ¾
3	5	9.5	13.9	2SVCPA35	Z-Vent Concentric Pipe Adjustable 3/5
4	6	9.5	13.9	2SVCPA46	Z-Vent Concentric Pipe Adjustable 4/6
4	7	9.5	13.9	2SVCPA47	Z-Vent Concentric Pipe Adjustable 4/7
5	7	9	14.5	2SVCPA57	Z-Vent Concentric Pipe Adjustable 5/7
5	8	9	14.5	2SVCPA58	Z-Vent Concentric Pipe Adjustable 5/8
6	8	9	14.5	2SVCPA68	Z-Vent Concentric Pipe Adjustable 6/8
6	9	9	14.5	2SVCPA69	Z-Vent Concentric Pipe Adjustable 6/9
7	10	9	14.5	2SVCPA710	Z-Vent Concentric Pipe Adjustable 7/10
8	11	9	14.5	2SVCPA811	Z-Vent Concentric Pipe Adjustable 8/11
8	12	9	14.5	2SVCPA812	Z-Vent Concentric Pipe Adjustable 8/12

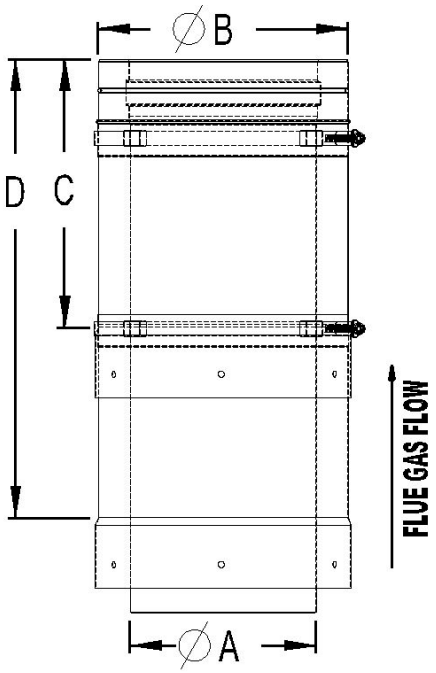

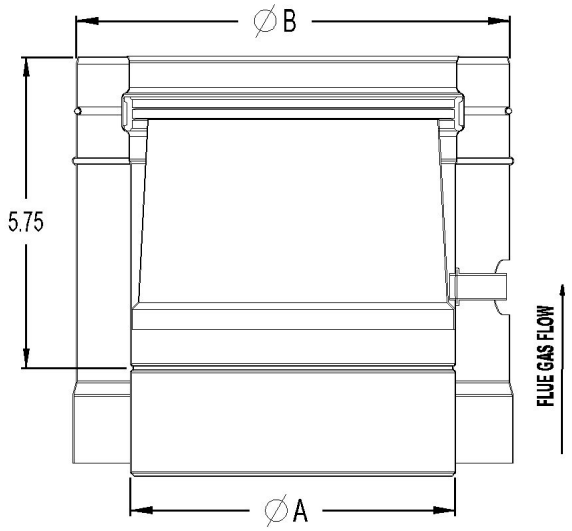

Z-Vent Concentric Pipe Drain

A	B	C	Part Number	Description
3	4	5.75	2SVCPD34	Z-Vent Concentric Pipe Drain ¾
3	5	5.75	2SVCPD35	Z-Vent Concentric Pipe Drain 3/5
4	6	5.75	2SVCPD46	Z-Vent Concentric Pipe Drain 4/6
4	7	5.75	2SVCPD47	Z-Vent Concentric Pipe Drain 4/7
5	7	5.75	2SVCPD57	Z-Vent Concentric Pipe Drain 5/7
5	8	5.75	2SVCPD58	Z-Vent Concentric Pipe Drain 5/8
6	8	5.75	2SVCPD68	Z-Vent Concentric Pipe Drain 6/8
6	9	5.75	2SVCPD69	Z-Vent Concentric Pipe Drain 6/9
7	10	5.75	2SVCPD710	Z-Vent Concentric Pipe Drain 7/10
8	11	5.75	2SVCPD811	Z-Vent Concentric Pipe Drain 8/11
8	12	5.75	2SVCPD812	Z-Vent Concentric Pipe Drain 8/12

Z-Vent Concentric Elbow 45°

A	B	C	D	Part Number	Description
3	4	1.62	3.37	2SVCE3445	Z-Vent Concentric Elbow ¾ x 45
3	5	1.62	3.37	2SVCE3545	Z-Vent Concentric Elbow 3/5 x 45
4	6	1.83	3.58	2SVCE4645	Z-Vent Concentric Elbow 4/6 x 45
4	7	1.83	3.58	2SVCE4745	Z-Vent Concentric Elbow 4/7 x 45
5	7	4.16	5.91	2SVCE5745	Z-Vent Concentric Elbow 5/7 x 45
5	8	4.16	5.91	2SVCE5845	Z-Vent Concentric Elbow 5/8 x 45
6	8	4.37	6.12	2SVCE6845	Z-Vent Concentric Elbow 6/8 x 45
6	9	4.37	6.12	2SVCE6945	Z-Vent Concentric Elbow 6/9 x 45
7	10	4.58	6.33	2SVCE71045	Z-Vent Concentric Elbow 7/10 x 45
8	11	4.79	6.54	2SVCE81145	Z-Vent Concentric Elbow 8/11 x 45
8	12	4.79	6.54	2SVCE81245	Z-Vent Concentric Elbow 8/12 x 45

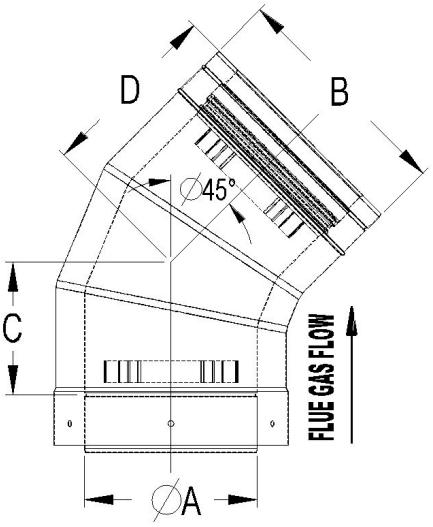

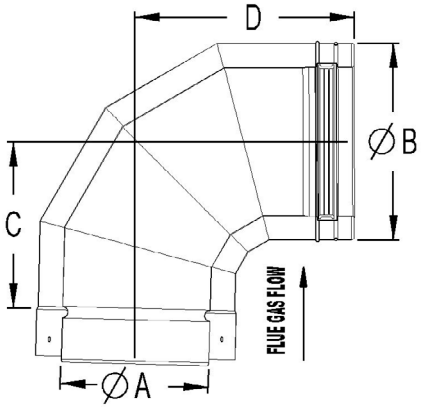

Z-Vent Concentric Elbow 90°

A	B	C	D	Part Number	Description
3	4	4.72	6.18	2SVCE3490	Z-Vent Concentric Elbow ¾ x 90
3	5	4.72	6.18	2SVCE3590	Z-Vent Concentric Elbow 3/5 x 90
4	6	5.22	6.66	2SVCE4690	Z-Vent Concentric Elbow 4/6 x 90
4	7	5.22	6.66	2SVCE4790	Z-Vent Concentric Elbow 4/7 x 90
5	7	6.63	8.32	2SVCE5790	Z-Vent Concentric Elbow 5/7 x 90
5	8	6.63	8.32	2SVCE5890	Z-Vent Concentric Elbow 5/8 x 90
6	8	7.5	9.28	2SVCE6890	Z-Vent Concentric Elbow 6/8 x 90
6	9	7.5	9.28	2SVCE6990	Z-Vent Concentric Elbow 6/9 x 90
7	10	8.28	9.84	2SVCE71090	Z-Vent Concentric Elbow 7/10 x 90
8	11	8.13	9.85	2SVCE81190	Z-Vent Concentric Elbow 8/11 x 90
8	12	8.13	9.85	2SVCE81290	Z-Vent Concentric Elbow 8/12 x 90

Z-Vent Concentric Intake Terminal

A	B	C	D	Part Number	Description
3	4	6.25	6	2SVCI34	Z-Vent Concentric Intake Terminal 3/4
3	5	6.25	7	2SVCI35	Z-Vent Concentric Intake Terminal 3/5
4	6	6.25	8	2SVCI46	Z-Vent Concentric Intake Terminal 4/6
4	7	6.25	9	2SVCI47	Z-Vent Concentric Intake Terminal 4/7
5	7	6.25	9.5	2SVCI57	Z-Vent Concentric Intake Terminal 5/7
5	8	6.25	10.5	2SVCI58	Z-Vent Concentric Intake Terminal 5/8
6	8	6.25	11	2SVCI68	Z-Vent Concentric Intake Terminal 6/8
6	9	6.25	12	2SVCI69	Z-Vent Concentric Intake Terminal 6/9
7	10	6.25	13.5	2SVCI710	Z-Vent Concentric Intake Terminal 7/10
8	11	6.25	15	2SVCI811	Z-Vent Concentric Intake Terminal 8/11
8	12	6.25	16.5	2SVCI812	Z-Vent Concentric Intake Terminal 8/12

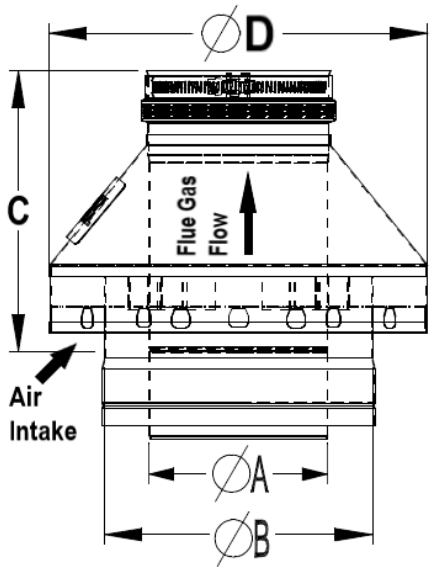

Z-Vent Concentric Intake Terminal Horizontal

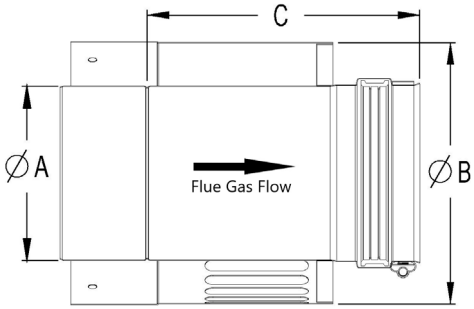

A	B	C	Part Number	Description
3	4	6.25	2SVCIH34	Z-Vent Concentric Intake Horizontal 3/4
3	5	6.25	2SVCIH35	Z-Vent Concentric Intake Horizontal 3/5
4	6	6.25	2SVCIH46	Z-Vent Concentric Intake Horizontal 4/6
4	7	6.25	2SVCIH47	Z-Vent Concentric Intake Horizontal 4/7
5	7	6.25	2SVCIH57	Z-Vent Concentric Intake Horizontal 5/7
5	8	6.25	2SVCIH58	Z-Vent Concentric Intake Horizontal 5/8
6	8	6.50	2SVCIH68	Z-Vent Concentric Intake Horizontal 6/8
6	9	6.50	2SVCIH69	Z-Vent Concentric Intake Horizontal 6/9
7	10	7.75	2SVCIH710	Z-Vent Concentric Intake Horizontal 7/10
8	11	8.25	2SVCIH811	Z-Vent Concentric Intake Horizontal 8/11
8	12	8.25	2SVCIH812	Z-Vent Concentric Intake Horizontal 8/12

Z-Vent Concentric Trim Ring

A	B	Part Number	Description
4	8	2SVSTR4	Z-Vent Trim Ring 4
5	9	2SVSTR5	Z-Vent Trim Ring 5
6	10	2SVSTR6	Z-Vent Trim Ring 6
7	11	2SVSTR7	Z-Vent Trim Ring 7
8	12	2SVSTR8	Z-Vent Trim Ring 8
9	13	2SVSTR9	Z-Vent Trim Ring 9
10	14	2SVSTR10	Z-Vent Trim Ring 10
11	15	2SVSTR11	Z-Vent Trim Ring 11
12	16	2SVSTR12	Z-Vent Trim Ring 12

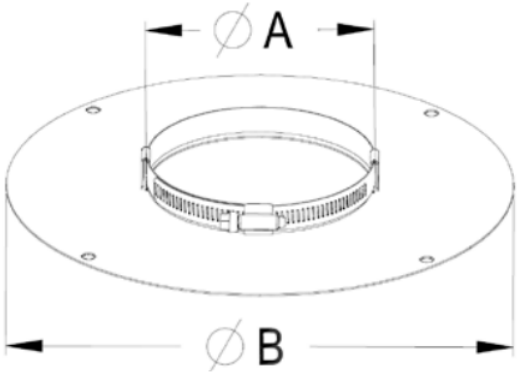

NOTES:

Concentric with Double Wall Screw Joint

1. Concentric vent (2SVC_) is special order.

Double Wall with ZV Clamp & Fiber Insulation

1. Insulated vent is special order with 2" fiber insulation for part ID, just add I2 to end of existing double wall part ID.

Z-Vent Concentric Adapter

A	B	C	D	E	F	Part Number	Description
3	4	4.25	1.13	7.25	8.75	2SVCA34	Z-Vent Concentric Adapter 3/4
3	5	4.25	1.13	7.25	8.75	2SVCA35	Z-Vent Concentric Adapter 3/5
4	6	4.75	1.5	8.75	10.875	2SVCA46	Z-Vent Concentric Adapter 4/6
4	7	5.25	1.5	8.75	11.75	2SVCA47	Z-Vent Concentric Adapter 4/7
5	7	5.25	2.13	9.75	12.75	2SVCA57	Z-Vent Concentric Adapter 5/7
5	8	5.25	2.13	9.75	13.75	2SVCA58	Z-Vent Concentric Adapter 5/8
6	8	5.75	2.75	10.75	14.75	2SVCA68	Z-Vent Concentric Adapter 6/8
6	9	5.75	2.75	10.75	15.75	2SVCA69	Z-Vent Concentric Adapter 6/9
7	10	6.5	3.5	11.5	17.75	2SVCA710	Z-Vent Concentric Adapter 7/10
8	11	7.5	4.5	12	19.75	2SVCA811	Z-Vent Concentric Adapter 8/11
8	12	7.5	4.5	12	20.75	2SVCA812	Z-Vent Concentric Adapter 8/12

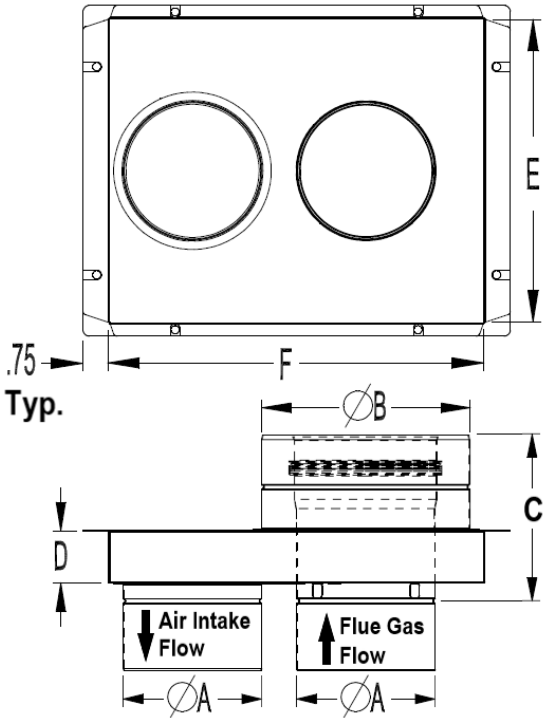

Z-Vent Concentric Z-Vent Concentric Tee

A	B	C	D	E	Part Number	Description
3	4	3.75	4	3	2SVCT34	Z-Vent Concentric Tee ¾
3	5	3.75	4.4	3.5	2SVCT35	Z-Vent Concentric Tee 3/5
4	6	4.25	5.5	4	2SVCT46	Z-Vent Concentric Tee 4/6
4	7	4.25	5.5	4.5	2SVCT47	Z-Vent Concentric Tee 4/7
5	7	4.75	5.5	4.5	2SVCT57	Z-Vent Concentric Tee 5/7
5	8	4.75	6.5	5	2SVCT58	Z-Vent Concentric Tee 5/8
6	8	5.25	6	5	2SVCT68	Z-Vent Concentric Tee 6/8
6	9	5.25	6.5	5.5	2SVCT69	Z-Vent Concentric Tee 6/9
7	10	5.75	7	6	2SVCT710	Z-Vent Concentric Tee 7/10
8	11	6.25	8	6.5	2SVCT811	Z-Vent Concentric Tee 8/11
8	12	6.25	8	7	2SVCT812	Z-Vent Concentric Tee 8/12

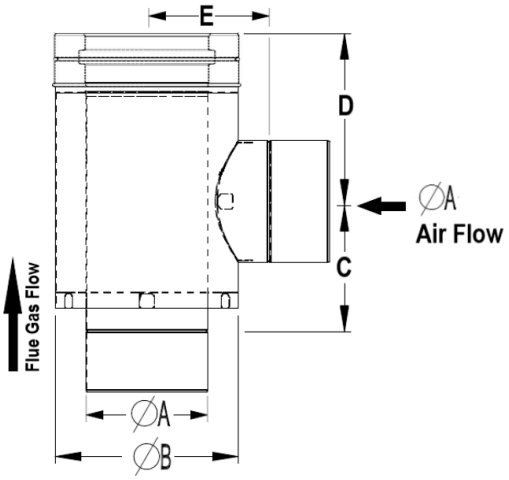

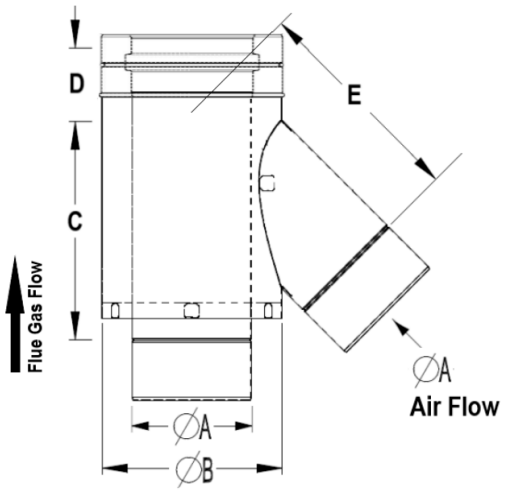

Z-Vent Concentric Z-Vent Concentric Lateral

A	B	C	D	E	Part Number	Description
3	4	5.375	2.125	5.5	2SVCL34	Z-Vent Concentric Lateral ¾
3	5	5.63	2.125	6.175	2SVCL35	Z-Vent Concentric Lateral 3/5
4	6	7.37	2.375	7.75	2SVCL46	Z-Vent Concentric Lateral 4/6
4	7	8	2.375	8.25	2SVCL47	Z-Vent Concentric Lateral 4/7
5	7	9.25	2.5	8.875	2SVCL57	Z-Vent Concentric Lateral 5/7
5	8	9.5	3	9.5	2SVCL58	Z-Vent Concentric Lateral 5/8
6	8	10.25	3.5	9.5	2SVCL68	Z-Vent Concentric Lateral 6/8
6	9	10.5	4	11	2SVCL69	Z-Vent Concentric Lateral 6/9
7	10	11	4.5	11.75	2SVCL710	Z-Vent Concentric Lateral 7/10
8	11	11.5	5	12.5	2SVCL811	Z-Vent Concentric Lateral 8/11
8	12	12	5.5	13	2SVCL812	Z-Vent Concentric Lateral 8/12

The installation must conform to the requirements of the appliance manufacturers' instructions, The National Fuel Gas Code and local codes and regulations.

Z-FLEX® LIMITED LIFETIME WARRANTY

Z-FLEX® ("Seller") extends the following LIMITED WARRANTY for Z-VENT® (the "Z-VENT®"): Seller warrants that at the time of purchase, the Z-VENT® will be free of manufacturers defects in material and/or workmanship. This warranty shall extend to the original purchaser of the Z-VENT® or, if purchased by a contractor, to the end user. This warranty is valid for a period of fifteen (15) years from the date of purchase, proved that the Z-VENT® has been installed according to Z-Flex® installation instructions. Deviating from the installation and use instructions included with the Z-VENT® will void the warranty. Under this Limited Warranty, Seller's sole responsibility and liability shall be to replace the Z-VENT® and/or accessories, if found by Seller to be defective according to the terms of the warranty, and shall not include replacement installation or other costs.

IMPORTANT: The Z-VENT® is designed for use with Category I, II, III and IV furnace and boiler venting and should not be used with any other type of furnace and boiler venting. Use of the Z-VENT® with any other type of furnace and boiler venting other than those recommended by Seller for use with its Z-VENT® will void the warranty.

WARNING: CONDENSATION WITH HIGH ACID CONTENT MAY BE PRODUCED DUE TO UNFORESEEN CONDITIONS. YOUR HEATING APPLIANCE AND VENTING SYSTEM SHOULD BE INSPECTED BY A LICENSED CONTRACTOR ON AN ANNUAL BASIS FOR POSSIBLE SIGNS OF DETERIORATION DUE TO RUSTING OR PIN HOLES. CONDENSATION WITH HIGH ACID CONTENT MAY CAUSE LEAKAGE OF HARMFUL GASES WHICH CAN CAUSE NAUSEA, FAINTING OR DEATH. IF DETERIORATION IS DETECTED CEASE USE OF HEATING SYSTEM AND CALL FURNACE/BOILER INSTALLER FOR REMEDIAL ACTION.

Please note: *Different manufacturers have different joint systems and adhesives. Do not mix pipe, fittings or joining methods from different manufacturers without an approved adapter, as doing so will void any and all warranties.*

To activate the warranty, the end-user must complete and return the Z-Flex® Warranty Registration Card within ninety (90) days of installation of the Z-VENT®. Upon written notice of any defects, Z-Flex® reserves the right to examine or establish reasonable proof of defective material or workmanship justifying replacement.

NO OTHER EXPRESS WARRANTY HAS BEEN MADE OR WILL BE MADE ON BEHALF OF SELLER WITH RESPECT TO THE Z-VENT® OR THE INSTALLATION OR REPLACEMENT OF THE Z-VENT®. SELLER SHALL NOT BE LIABLE FOR ANY SPECIAL, INCIDENTAL, INDIRECT OR CONSEQUENTIAL DAMAGES.

As some jurisdictions do not allow the exclusion or limitation of incidental or consequential damages, the above limitations or exclusions may not apply to you.

IMPLIED WARRANTIES, INCLUDING ANY WARRANTY OF MERCHANTABILITY OR FITNESS FOR A PARTICULAR PURPOSE, IMPOSED ON THIS SALE UNDER STATE LAW, ARE LIMITED TO THE PERIOD DURING WHICH THIS WARRANTY IS IN EFFECT. AS SOME JURISDICTIONS DO NOT ALLOW LIMITATIONS ON THE LENGTH OF AN IMPLIED WARRANTY, THE ABOVE LIMITATION MAY NOT APPLY TO YOU.

Claims under this warranty must be made within the warranty period in writing and directed to:

USA:
Warranty Claims
Z-Flex®(US) Inc. 20 Commerce Park North
Bedford, New Hampshire 03110
(603) 669-5136 or (800) 654-5600.

Canada:
Warranty Claims
Z-Flex® Inc. 452 Attwell Drive
Etobicoke, ON M9W 5C3
(416) 679-0045

This warranty gives you specific legal rights, and you may also have other rights that vary in different states and provinces.

WARRANTY REGISTRATION CARD: Z-FLEX®

For this warranty to be effective, this card must be completed upon purchase of the covered Z-VENT® and returned to Z-Flex® within ninety (90) days of installation of the Z-VENT®.

Original end-user's name:_____

Address of premises in which the Z-VENT® is installed:_____

_____

Z-VENT® purchased from:_____

Date of Installation:_____

Type of Heating System into which Z-VENT® installed:_____

I understand and agree to the Warranty as stated:_____

_____ _____

Signature

Flexmaster Canada Limited
Z-Vent Dimensional Data Guide Ver. 02.2023

20 Commerce Park North
Bedford, New Hampshire 03110-6911
tel: 603.669.5136 fax: 603.669.0309

452 Attwell Drive
Etobicoke, ON M9W 5C3
tel: 416.679.0045 fax: 416.679.0051

www.z-flex.com email sales@z-flex.com

Rev 06.2025